USER'S MANUAL

HT Tong

Manual Tongs

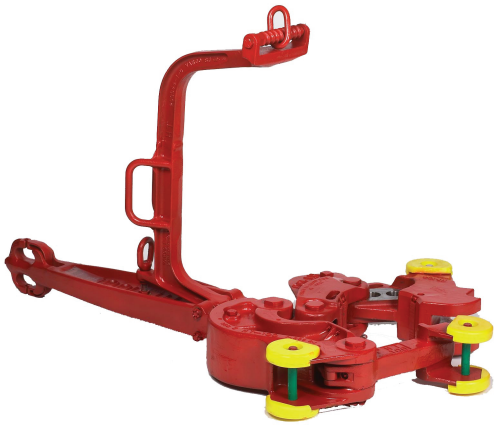

ORIGINAL INSTRUCTIONS

REFERENCE HT Tong	REFERENCE DESCRIPTION Manual Tongs
This document contains proprietary and confidential information which is the property of National Oilwell Varco, L.p, its affiliates or subsidiaries (all collectively referred to hereinafter as "NOV"). It is loaned for limited purposes only and remains the property of NOV. Reproduction, in whole or in part, or use of this design or distribution of this information to others is not permitted without the express written consent of NOV. This document is to be returned to NOV upon request or upon completion of the use for which it was loaned. This document and the information contained and represented herein is the copyrighted property of NOV.	**VarcoBJ BV** Nijverheidsweg 45 4879 AP Etten-Leur P.O. Box 17 4870 AA Etten-Leur The Netherlands Tel + 31-76-5083000 Fax + 31-76-5046000 www.nov.com
DOCUMENT NUMBER **50006190-MAN-001**	REV **E** Dec 2015

www.nov.com

NATIONAL OILWELL VARCO

Page intentionally left blank

NATIONAL OILWELL VARCO

User's Manual

HT-Tongs

Manual Tongs

ORIGINAL INSTRUCTION

REFERENCE HT-Tongs	REFERENCE DESCRIPTION Manual Tongs
This document contains proprietary and confidential information which is the property of National Oilwell NOV, L.P., its affiliates or subsidiaries (all collectively referred to hereinafter as "NOV"). It is loaned for limited purposes only and remains the property of NOV. Reproduction, in whole or in part, or use of this design or distribution of this information to others is not permitted without the express written consent of NOV. This document is to be returned to NOV upon request or upon completion of the use for which it was loaned. This document and the information contained and represented herein is the copyrighted property of NOV.	NOVBJ BV Nijverheidsweg 45 4879AP Etten-Leur Tel: +31-76-5083000 Fax: +31-76-5046000
DOCUMENT NUMBER **50006190-MAN-001**	REV **E** Dec.. 2015

NATIONAL OILWELL VARCO

www.nov.com

Revision History

E	December 2015	Update
D	September 2013	Update
C	December 2012	Update
B	September 2010	Update
A	December 2004	Update
-	November 2003	Issued for Implementation
Rev	**Date**	**Reason for issue**

Change Description

Revision	Change Description
-	First Issue
A	Changes throughout
B	Inspection, storage & reception changed.
C	MSDS datasheets added, operational additions
D	Missing HT55 info re-inserted, many other updates, page numbers corrected
E	Chapter General information stickers deleted
E	All chapters small changes

© Copyright 2015 NOV, NOV LP. All rights reserved. Patent Pending.

NOV®, Varco® is a registered trademark of NOV, Varco I/P reg. U.S. Patent & Trademark Office. This publication is the property of, and contains information proprietary to NOV, Varco International, Inc. No part of this publication may be reproduced or copied in any form, or by any means, including electronic, mechanical, photocopying, recording or otherwise, without the prior written permission of NOV, Varco IP®.

All product, brand, or trade names used in this publication are the trademarks or registered trademarks of their respective owners. Information in this manual is subject to change without notice.

Table of Contents

General information . . . 7
Instructions . . . 7
Special information . . . 9
Intended audience . . . 9
Conventions . . . 10
Notes, Cautions, and Warnings . . . 10
Note: . . . 10
Caution: . . . 10
Warning: . . . 10
Illustrations . . . 10
Safety Requirements . . . 10
General System Safety Practices . . . 11
Personnel Training . . . 11
Recommended Tools . . . 11
Replacing Components . . . 11
Routine Maintenance . . . 11
Proper Use of Equipment . . . 11
Identification numbers . . . 11
Warning plates . . . 12
Lifting . . . 13
HT-Tong restrictions . . . 13
Limited warranty . . . 13
CE marking . . . 13
Specifications . . . 15
General description . . . 15
Part numbers, ratings & weights . . . 16
Lubrication and maintenance . . . 17
Recommended inspections . . . 17
Safety . . . 17
Recommended grease . . . 17
Inspection . . . 18
Daily Inspection (when tool is in use) . . . 18
6 Monthly Inspection (when tool is in use) . . . 19
Annual (1 year) Inspection (when tool is in use) . . . 19
Magnetic Particle Inspection . . . 20
Evaluations of indications . . . 20
Qualifications and certification . . . 20
Examination . . . 20
Table 1: Acceptance criteria for API 7k equipment . . . 20
Table 2: Acceptance criteria for welds . . . 21
Table 3: Acceptance Criteria for wrought material . . . 21
Tests . . . 21
Maximum allowable wear to maintain 100% torque rating . . . 22
Shop repairs . . . 22

Table of Contents

Changing dies/inserts . . . 22
Installation & commissioning . . . 23
General procedure . . . 23
Operation . . . 25
Safety information befor use . . . 25
Snub line saver pn 50006017 . . . 26
Applying make up torque . . . 27
Direction of pulling . . . 28
Height of the tool joint . . . 29
Assembly . . . 31
Assembly & dis-assembly . . . 31
Disassembly of the hanger and lever assembly . . . 31
Changing components . . . 32
Changing dies/inserts . . . 32
Lug jaw removal for changing sizes . . . 32
Lug jaw HT200 nut removal . . . 32
Trouble shooting . . . 33
Overview possible problems . . . 33
Appendixes . . . 35
Risk assessment acc. to EN12100:2010 . . . 35
Conclusion Risk Assessment . . . 35
General conclusions . . . 35
Applicable standards . . . 35
Reception, storage, transport & decommissioning . . . 35
Immediatelly after reception* . . . 35
Inspection and test during storage . . . 35
Storage general recommendations . . . 36
Storage after use . . . 36
Transport . . . 36
Decommissioning . . . 36
Torque values (US) . . . 37
Torque values (metric) . . . 38
Drawings . . . 39
Parts lists and exploded views . . . 39
Additional parts . . . 39
Parts list HT 14 manual tong . . . 42
Exploded view HT14 . . . 43
Parts list HT 35 manual tong . . . 44
Exploded view HT35 . . . 45
Parts list HT 55 manual tong . . . 46
Exploded view HT55 . . . 47
Part list HT 65 manual tong . . . 48
Exploded view HT65 . . . 49
Parts list HT100 manual tong . . . 50

Table of Contents

Exploded view HT100 51
Parts list HT200 manual tong 52
Exploded view HT200 53
Air lift assembly HT200 54
Special dressing of HT200 55
Casing head assemblies overview 56
Parts list HT 50 casing head assemblies 57
Snub line saver 59
Critical area drawings 60

Table of Contents

General information

Instructions

Original Instructions are published in English; in the event the end-user may wish to obtain a translation of these in the official language of the country in which the machinery is to be used please contact your local NOV representative. Please note that this service may not be free of charge. Original Instruction can be downloaded from www.NOV.com/drilling

Оригиналните инструкции са публикувани на английски език; в случай, че крайният потребител желае да получи превод на тези инструкции на официалния език на държавата, в която се използва оборудването, моля, свържете се с вашия местен представител на NOV. Моля, имайте предвид, че тази услуга може да не е безплатна. Оригиналните инструкции могат да бъдат изтеглени от: www.NOV.com/drilling

Původní návod je zveřejněn v angličtině; pokud si koncový uživatel přeje získat překlad návodu v úředním jazyce země, ve které se zařízení bude používat, může se obrátit na místního zástupce společnosti NOV. Upozorňujeme, že tato služba nemusí být zdarma. Původní návod je k dispozici ke stažení na adrese www.NOV.com/drilling

Juhendi originaal on avaldatud inglise keeles. Kui lõppkasutaja soovib tõlget selle riigi ametlikus keeles, kus seadmeid kasutatakse, palume pöörduda NOV-i kohaliku esindaja poole. Palume silmas pidada, et see teenus ei pruugi olla tasuta. Juhendi originaali saab alla laadida veebisaidilt www.NOV.com/drilling.

Instrukcijų originalas yra skelbiamas anglų kalba. Jei galutinis vartotojas norėtų gauti šių instrukcijų vertimą į šalies, kurioje įrengimai turi būti naudojami, oficialiąją kalbą, reikėtų kreiptis į vietinį NOV atstovą. Prašome atkreipti dėmesį, kad ši paslauga gali būti mokama. Instrukcijų originalą galima parsisiųsdinti iš tinklalapio www.NOV.com/drilling

Šo norādījumu oriģinālvaloda ir angļu valoda; gadījumā, ja jūs kā gala lietotājs vēlaties saņemt norādījumu tulkojumu tās valsts oficiālajā valodā, kurā šī mašīna tiks lietota, lūdzu, sazinieties ar vietējo „NOV” pārstāvi. Lūdzu, ņemiet vērā, ka šis var nebūt bezmaksas pakalpojums. Norādījumus oriģinālvalodā varat lejupielādēt no vietnes www.NOV.com/drilling

A használati utasítások eredetileg angol nyelven kerülnek kiadásra. Amennyiben a végfelhasználó meg szeretne kapni azon ország hivatalos nyelvén készült fordításukat, ahol a gépet használni fogják, akkor kérjük, vegye fel a kapcsolatot a NOV helyi képviselőjével. Kérjük, vegye figyelembe, hogy ezt a szolgáltatást esetleg nem tudjuk díjmentesen nyújtani. Az eredeti használati utasítás a www.NOV.com/drilling oldalról tölthető le.

Oryginalne instrukcje zostały wydane w języku angielskim. Aby uzyskać tłumaczenie tych instrukcji na język kraju, w którym urządzenie ma być używane, należy skontaktować się z lokalnym przedstawicielem firmy NOV. Należy pamiętać, że taka usługa jest płatna. Oryginalną instrukcję można pobrać na stronie www.NOV.com/drilling

As Instruções Originais são publicadas em inglês; se o utilizador final pretender obter uma tradução destas instruções no idioma oficial do país onde a maquinaria vai ser utilizada, deverá contactar o representante local da NOV. Chamamos a atenção para o facto de este serviço poder não ser gratuito. As Instruções Originais podem ser transferidas a partir do site www.NOV.com/drilling

Instrucțiunile originale sunt publicate în limba engleză; în eventualitatea în care utilizatorul final dorește să obțină o traducere a acestora în limba oficială a țării în care se vor folosi utilajele, vă rugăm să luați legătura cu reprezentantul NOV local. Vă rugăm să rețineți că este posibil ca acest serviciu să nu fie gratuit. Instrucțiunile originale pot fi descărcate de pe www.NOV.com/drilling

Pôvodný návod je vydaný v anglickom jazyku. Ak si koncový používateľ želá získať preklad v úradnom jazyku štátu, v ktorom sa stroj bude používať, obráťte sa na miestneho zástupcu spoločnosti NOV. Upozorňujeme, že táto služba nemusí byť bezplatná. Originálny návod je k dispozícii na prevzatie zo stránky www.NOV.com/drilling.

Originalna navodila so objavljena v angleščini; če končni uporabnik želi prevod teh navodil v uradnem jeziku države, kjer se bodo stroji uporabljali, se obrnite na lokalnega predstavnika podjetja NOV. Ta storitev mogoče ne bo brezplačna. Originalna navodila lahko prenesete s spletne strani www.NOV.com/drilling

De originale anvisninger er udgivet på engelsk. Måtte slutbrugeren ønske at få en oversættelse af disse i det officielle sprog af det land, hvor maskineriet skal bruges, henvises der til den lokale NOV-repræsentant. Bemærk venligst at denne service måske ikke er gratis. De originale anvisninger kan downloades fra www.NOV.com/drilling

Die Originalanleitung erscheint in englischer Sprache. Wünscht der Endverbraucher eine Übersetzung dieser Anleitung in der offiziellen Sprache des Landes, in dem die Maschine benutzt werden soll, dann wenden Sie sich bitte an Ihren örtlichen NOV-Vertreter. Bitte beachten Sie, dass diese Dienstleistung möglicherweise nicht kostenlos ist. Die Originalanleitung können Sie unter folgendem Link herunterladen: www.NOV.com/drilling.

Las instrucciones originales son publicadas en inglés. En el caso de que el usuario final quiera obtener una traducción en el idioma oficial del país donde la maquinaria será utilizada, debe ponerse en contacto con su representante local de NOV. Tenga en cuenta que este servicio puede conllevar gastos. Es posible descargar las instrucciones originales desde www.NOV.com/drilling.

Alkuperäiset ohjeet on julkaistu englannin kielellä; mikäli loppukäyttäjä haluaa saada niiden käännöksen sen maan virallisella kielellä, jossa konetta käytetään, on otettava yhteys paikalliseen NOV-edustajaan. On mahdollista, että tästä palvelusta peritään maksu. Alkuperäiset ohjeet voi ladata osoitteesta www.NOV.com/drilling

Les consignes originales sont publiées en anglais; dans le cas où l'utilisateur final demande une traduction de ces consignes vers la langue officielle du pays dans lequel la machine doit être utilisée, veuillez contacter le représentant NOV sur place. Le service de traduction peut être payant. Les consignes originales peuvent être téléchargées du site www.NOV.com/drilling.

Foilsítear Treoracha bunúsacha sa Bhéarla; i gcás ar mian leis an úsáideoir aistriúchán a fháil i dteanga oifigiúil na tíre ina bhfuil an t-innealra le húsáid déan teagmháil le d'ionadaí áitiúil NOV le do thoil. Bíodh a fhios agat gur féidir nach bhfuil an tseirbhís sin saor in aisce. Is féidir Treoir Bhunúsach a íoslódáil ag www.NOV.com/drilling

Οι αρχικές οδηγίες δημοσιεύθηκαν στην Αγγλική γλώσσα. Αν ο τελικός χρήστης θέλει να λάβει μια μετάφραση των οδηγιών στην επίσημη γλώσσα της χώρας που θα χρησιμοποιηθεί το μηχάνημα, μπορείτε να επικοινωνήσετε με τον τοπικό σας αντιπρόσωπο της NOV. Προσέξτε γιατί αυτή η υπηρεσία μπορεί να μην είναι δωρεάν. Τις αρχικές οδηγίες μπορείτε να τις κατεβάσετε από το www.NOV.com/drilling.

Le Istruzioni originali sono pubblicati in lingua inglese, nel caso in cui l'utente finale intenda ottenere una traduzione di queste istruzioni nella lingua ufficiale del paese in cui la macchina deve essere usata si prega di contattare il rappresentante locale della NOV. Facciamo inoltre rilevare che questo servizio può non essere a titolo gratuito. Le Istruzioni originali possono essere scaricate dal sito: www.NOV.com/drilling

Istruzzjonijiet oriġinali bl-Ingliż; jekk l-uttent aħħari jixtieq jakwista traduzzjoni ta' dawn fil-lingwa uffiċjali tal-pajjiż fejn il-makkinarju għandu jintuża kkuntattja r-rappreżentant lokali tan-NOV. Innota li dan is-servizz huwa b'xejn. L-istruzzjoni oriġinali jista' jitniżżel minn www.NOV.com/drilling

De oorspronkelijke instructies zijn in het Engels gepubliceerd. Als de eindgebruiker een vertaling van de instructies wil ontvangen in de officiële taal van het land waar de machine zal worden gebruikt, neem dan contact op met uw plaatselijke NOV vertegenwoordiger. Let op dat er kosten aan deze service verbonden kunnen zijn. De oorspronkelijke instructies kunnen worden gedownload op www.NOV.com/drilling.

Originalinstruktionerna publiceras på engelska. Om slutanvändaren önskar en översättning av dessa till det officiella språket i det land där utrustningen ska användas, kontakta den lokala NOV-representanten. Observera att denna tjänst eventuellt inte är kostnadsfri. Originalinstruktionerna kan laddas ned från www.NOV.com/drilling

Special information

Detailed descriptions of standard workshop procedures, safety principles and service operations are not included. Please note that this manual may contain warnings about procedures which could damage equipment, make it unsafe or cause PERSONAL INJURY. Please understand that these warnings cannot cover all conceivable ways in which service (whether or not recommended by NOV) might be done or the possible hazardous consequences of each conceivable ways. Anyone using service procedures or tools, whether or not recommended by NOV, must be thoroughly satisfied that neither personal safety nor equipment safety will be jeopardized.

All information contained in this manual is based upon the latest product information available at any time of printing. We reserve the right to make changes at any time without notice.

Intended audience

This manual is intended for use by field engineering, installation, operation, and repair personnel. Every effort has been made to ensure the accuracy of the information contained herein. NOV® 2015, NOV, Varco LP, will not be held liable for errors in this material or for consequences arising from misuse of this material.

Conventions

Notes, Cautions, and Warnings

Notes, cautions, and warnings provide readers with additional information and to advise the reader to take specific action to protect personnel from potential injury or lethal conditions. They may also inform the reader of actions necessary to prevent equipment damage. Please pay close attention to these advisories.

Note:

The note symbol indicates that additional information is provided about the current topics.

Caution:

The caution symbol indicates that potential damage to equipment or injury to personnel exists. Follow instructions explicitly. Extreme care should be taken when performing operations or procedures preceded by this caution symbol.

Warning:

The warning symbol indicates a definite risk of equipment damage or danger to personnel. Failure to observe and follow proper procedures could result in serious or fatal injury to personnel, significant property loss or significant equipment damage.

Illustrations

Illustrations (figures) provide a graphical representation of equipment components or screen snapshots for use in identifying parts or establishing nomenclature and may or may not be drawn to scale.

For component information specific to your rig configuration see the technical drawings included with your NOV documentation.

Safety Requirements

NOV equipment is installed and operated in a controlled drilling rig environment involving hazardous situations. Proper maintenance is important for safe and reliable operation. Procedures outlined in NOV manuals are the recommended methods of performing operations and maintenance.

CAUTION: To avoid injury to personnel or equipment damage, carefully observe requirements outlined in this section.

General System Safety Practices

The equipment discussed in this manual may require or contain one or more utilities such as electrical, hydraulic, pneumatic or cooling water.

CAUTION: Read and follow the guidelines below before installing equipment or performing maintenance to avoid endangering exposed persons or damaging equipment.

- Isolate energy sources prior to beginning work.
- Avoid performing maintenance or repairs while the equipment is in operation.
- Wear proper protective equipment during equipment installation, maintenance or repair.

Personnel Training

All personnel performing installation, operations, repair, or maintenance procedures on the equipment, or those in the vicinity of the equipment, should be trained on rig safety, tool operation and maintenance to ensure their safety.

CAUTION: Personnel should wear protective gear during installation, maintenance and certain operations.

Contact the NOV training department for more information about equipment operation and maintenance training.

Recommended Tools

Service operations may require the use of tools designed specifically for the purpose described. NOV recommends that only those tools specified be used when stated. Ensure that personnel and equipment safety are not jeopardized when following service procedures or using tools not specifically recommended by NOV.

Replacing Components

- Verify that all components (such as cables, hoses, etc.) are tagged and labeled during assembly and disassembly of equipment to ensure correct installation.
- Replace failed or damaged components with NOV certified parts. Failure to do so could result in equipment damage or injury to personnel.

Routine Maintenance

Equipment must be maintained on a routine basis. See this manual for maintenance recommendations.

CAUTION: Failure to conduct routine maintenance could result in equipment damage or injury to personnel.

Proper Use of Equipment

NOV equipment is designed for specific functions and applications and should be used only for its intended purpose.

Identification numbers

You will find the serial number of the tool stamped into the lever.

Warning plates

WARNING: Warning plates must be present on the HT-Tong. Do not remove the labels. When a label or warning plate has disappeared, it must be replaced.

Information plates p/n 26119-6

p/n 26119-5

Information plates p/n 30808

p/n 200568

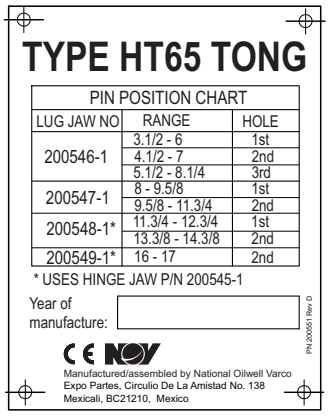

Information plates p/n 200551

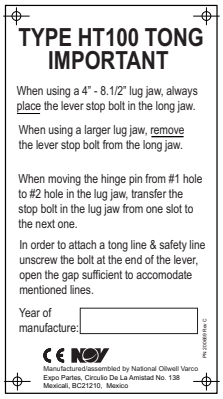

p/n 200669

Information plate p/n 26119-7

Lifting

The lifting procedures should carefully be observed and carried out according to the manual.

HT-Tong restrictions

The HT-Tong is designed to be used as a tong for making up and breaking out tubular connections and must not be used for any other purpose.

Limited warranty

The warranty will be void if the HT-Tong or parts were either:

- unauthorized modified, repaired or serviced
- replacement parts not manufactured by NOV were utilized
- not properly stored or maintained

CE marking

Page intentionally left blank

Specifications

General description

The HT-Tong is a tool designed for making up and breaking connections of tubular goods, from light tubing to heavy wall pipe and drill collars. There are 7 types, varying in torque capacity from 10,000 to 200,000 lbs / ft (13,560 - 271,000Nm). Covered sizes from 2.3/8" to 17 ", or 36" (HT50 with extended reach).

Interchangeable lug jaw design permits each tong to handle different sizes of tubular. By installing hinge jaws (available for some models), bigger tubular sizes can be handled.

The tongs can be assembled for either making-up or break-out by removing the hanger and turning the complete HT Tong over.

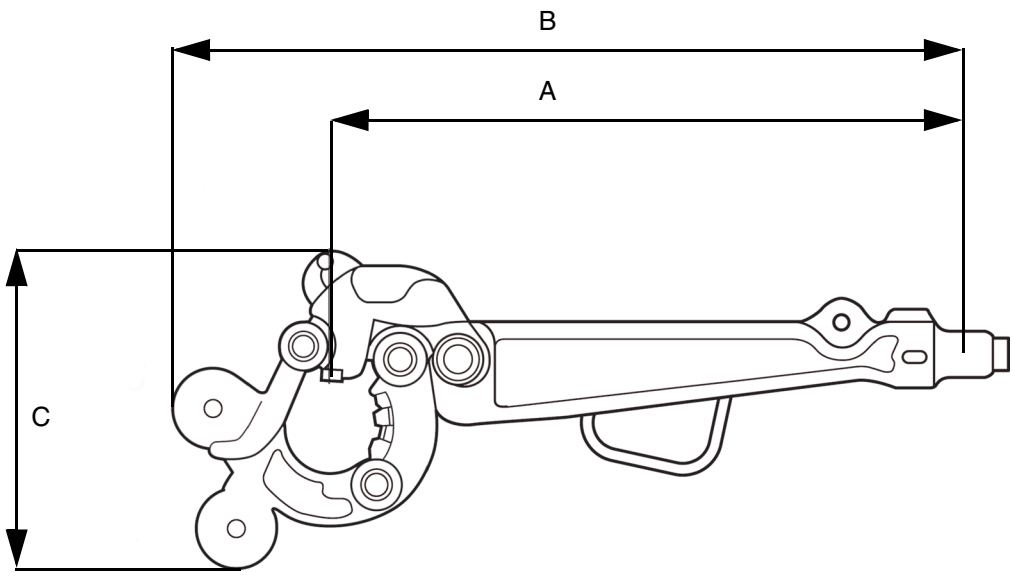

Tong type	Size range lever			Dimensions									
				A max		A min		B max		B min		C	
	inch	mm	type	inch	mm	inch	mm	inch	mm	inch	mm	inch	mm
HT14	2 3/8 -7	60.3 - 177.8	Standard	27	685	24 3/4	628	33	838	30 3/4	181	14	355
HT35	2 3/8-10 3/4	60.3 - 273.1	Long lever	47 1/8	1196	4 5/8	1133	57 1/8	1450	54 5/8	1387	18	457
			Short lever	36 3/16	919	33 11/16	885	46 11/16	1173	43 11/16	1109	18	457
HT55	3 1/2 -13 3/8	88.9 - 339.7	Long lever	55 3/16	1401	52 1/16	1322	66 7/16	1687	59 9/16	1512	23 1/4	590
			Short lever	49 3/16	1249	46 1/16	1169	60 7/16	1535	53 9/16	1360	23 1/4	590
HT65	3 1/2 -17	88.9 - 431.8	Standard	59 9/16	1436	50 15/16	1293	72 9/16	1843	72 9/16	1519	35 3/4	908
HT100	4-17	101.6 - 431.8	Standard	60	1524	53 7/8	1368	78	1981	78	1641	34 1/8	866
	7 1/2 -12	190.5 - 304.8	Standard	62 1/2	1597	60	1524	80	2032	76 3/8	1940	31 3/4	806
HT200	6-16	203.2 - 406	Standard	62 3/8	1584	57 11/16	1465	78	1981	68	1727	38	965
Casing head assembly only													
HT50	13 3/8 - 36	339.7 - 914.4		Lever to be used with HT55 tong and hanger									

Part numbers, ratings & weights

Part number	Type	Lug jaw pn#	Lug jaw size (inch)	Rating (ft-lbs)
	HT200	200506-SP	6 - 7.7/8"	200,000
200500	HT200	200506-1	8 - 9 5/8"	200,000
	HT200	200507-1*	9 - 11 1/8"	175,000
	HT200	200508-1**	11 - 12½"	200,000
	HT200	200505-1****	11½ - 16"	150,000
200071	HT100	200663-1	4 - 8½"	100,000
	HT100	200664	8½ - 12"	100,000
	HT100	200665	12 - 15"	75,000
	HT100	200666	15 ¾"	60,000
	HT100	200667	16 - 17"	60,000
200540	HT65	200546-1	3½ - 8¼"	65,000
	HT65	200547-1	8 - 11¼"	65,000
	HT65	200548-1	11¾ - 14 3/8"	40,000
	HT65	200549-1	16 - 17"	40,000
200560 (long lever) 200560-1 (short lever)	HT55	200083-1	3½ - 5"	35,000
	HT55	200084-1	5 - 6¾"	55,000
	HT55	200085-1	6 5/8 - 9"	55,000
	HT55	200086-1	9 - 10 ¾"	40,000
	HT55	200087-1	11 ¾"	30,000
	HT55	200088-1	12"	30,000
	HT55	200089-1	12 ¾ - 13"	30,000
	HT55	200090-1	13 3/8"	30,000
Casing head assemblies only	HT50	200580-1	13 3/8- 14½"	50,000
	HT50	200580-2	14½ - 16"	50,000
	HT50	200580-3	16 - 17½"	50,000
	HT50	200580-4	17½ - 19"	50,000
	HT50	200580-5	19 - 20"	50,000
	HT50	200580-6	20 - 21½"	50,000
	HT50	200580-7	21½ - 23"	50,000

Part number	Type	Lug jaw pn#	Lug jaw size (inch)	Rating (ft-lbs)
Casing head assemblies only	HT50	200580-8	24 - 25½"	50,000
	HT50	200600-1	25½ - 27"	50,000
	HT50	200600-2	27 - 28½"	50,000
	HT50	200600-3	28½ - 30"	50,000
	HT50	200600-4	30 - 31 5/8"	50,000
	HT50	200600-5	31½ - 33"	50,000
	HT50	200600-6	33 - 34½"	50,000
	HT50	200600-7	34½ - 36"	50,000
200620-1 (short lever 7-5/8 x 10-3/4) 200620-2 (long lever 2-3/8 x 7) 200620-3 (short lever 2-3/8 x 7	HT35	200076-1	2 3/8- 3.668"	15,000
	HT35	200077-1	2 7/8- 4¼"	15,000
	HT35	200078-1	3½ - 5¼"	25,000
	HT35	200079-1	5¼ - 7"	33,500
	HT35	200080-2***	7 - 8 5/8"	25,000
	HT35	200081-2***	9 5/8- 10¾"	32,000
200640	HT14	200645-1	2 3/8- 3½"	10,000
	HT14	200646-1	3½ - 5"	10,000
	HT14	200647-1	4¾ - 6¼"	14,000
	HT14	200648-1	5¾ - 7"	12,000

Appr. Weights (1 tong ass'y only)

HT14	125 to 145 lbs (57 to 66 kg)
HT35	285 to 330 lbs (130 to150 kg)
HT55	425 to 465 lbs (192 to 210 kg)
HT65	500 to 590 lbs (226 to 267 kg)
HT100	665 to 760 lbs (300 to 335 kg)
HT200	1140 to 1200 lbs (517 to 545 kg)

* = 200507-1 is also for size range 13" - 14.3/4" with hinge jaw (pn 200505-1)

** = 200508-1 is also for size range 14.3/4" - 16" with hinge jaw (pn 200505-1)

*** = 200080-2 + 200081-2 is hinge + lug jaw assembly

**** = Hinge jaw ass'y

Lubrication and maintenance

CAUTION: Practice safety in all performances of operation and maintenance and use approved safety methods, materials and tools. Keep hands away from any pinch point or undesignated areas; use provided handles for operating manual tongs.

Recommended inspections

NOTE: The owner / user should develop and update inspection, maintenance, repair and remanufacture procedures consistent with equipment application, loading, work environment, usage and operational conditions.

These factors may change as a result of new technology, product improvements or fundamental changes in service conditions.

Alternatively, NOV recommends using the Periodic inspection and maintenance Categories and Frequencies as mentioned in API RP8B Table 1. Long-term planning shall be adjusted in order not to interfere unnecessarily with the running operations.

Safety

WARNING: Only original NOV parts must be used. HT-tongs are produced from cast alloy heat treated steel and must not be welded in the field. Improper welding can cause cracks and brittleness in heat-affected areas which can result in dramatic weakening of the part and possible failure. Repairs involving welding and/or machining should be performed only by an NOV authorized repair facility. Using a HT-tongs that has been improperly welded or repaired is dangerous.

Recommended grease

Use extreme pressure, lithium based, multi purpose grease classification according to ISO 6743-9:2003 Lubricants, industrial oil and related products (class L) - Classification - Part 9: Family X (greases) or equivalent.

Minimum requirements:

Operating temperature range	Grease type
Temp. **above** -20° C / -4° F	EP2: L-XBAFB, NLGI grade 1 or 2

Inspection

Daily Inspection (when tool is in use)

Category I.

This category involves observing the equipment during operation for indications of inadequate performance. When in use, equipment shall be visually inspected on a daily basis for cracks, loose fits or connections, elongation of parts, and other signs of wear, corrosion or overloading. Any equipment found to show cracks, excessive wear, etc., shall be removed from service for further examination. The equipment shall be visually inspected by a person knowledgeable in that equipment and its function.

Category II.

This is Category I inspection plus further inspection for corrosion, deformation, loose or missing components, deterioration, proper lubrication, visible external cracks, and adjustment.

Procedure

Observe and repair when needed (cat I + II)

Observe the functioning of the tong as follows:	❑ OK
1) Check for proper latch engagement on lugs of lug jaw. The latch must not contact any part of the tong when latched and under torque except the lug on lug jaw.	❑ OK
2) Check for worn hinge pins and hinge pin bores by trying to vertically move jaws from lever	❑ OK

Procedure

Visually inspect and repair when needed (cat I + II)

1. Check for worn and damaged parts	❑ OK
2. Check for loose and missing parts	❑ OK
3. Check all pins are properly locked	❑ OK
4. Brush dies clean and check for wear	❑ OK
5. Check the proper locking of:	
• Bolts and nuts	❑ OK
• Slotted nuts & cotter pins	❑ OK
• Lock tabs & lock bars	❑ OK
• Roll pins and dowel pins	❑ OK
• Snap rings	❑ OK
• Cotter pins	❑ OK

6 Monthly Inspection (when tool is in use)

Category III

This is Category II inspection plus further inspection, which should include NDT of critical areas and may involve some disassembly to access specific components and to identify wear that exceeds the manufacturer's allowable tolerances.

Procedure 6 Monthly Inspection

Procedure on rig (cat III) ;

Disassemble the following parts of the tong for dimensional check according to max. allowable wear (see this chapter):

- Hinge pins
- Latch pins
- Hinge pin holes
- Latch pin holes
- Jaws/Latches

Annual (1 year) Inspection (when tool is in use)

Category IV

This is Category III inspection plus further inspection for which the equipment is disassembled to the extent necessary to conduct NDT of all primary-load-carrying components as defined by manufacturer. Equipment shall be:

Disassembled in a suitably-equipped facility to the extent necessary to permit full inspection of all primary-load-carrying components and other components that are critical to the equipment & Inspected for excessive wear, cracks, flaws and deformations.

Corrections shall be made in accordance with the manufacturer's recommendations. Prior to Category III and Category IV inspections, all foreign material such as dirt, paint, grease, oil, scale, etc. shall be removed from the concerned parts by a suitable method (e.g. paint-stripping, steam-cleaning, grit-blasting).

Procedure Annual (1 year) Inspection

Annual (1 year) Inspection (cat IV)

MPI HT tong major load bearing components critical areas as per MPI-procedure, using the Critical Area Drawings. Major load bearing components are:

- Latch lug jaw (CA-222)
- Latch jaw (CA-223)
- Short jaw (CA-224)
- Lever & Tubing tong lever (CA-225)
- Long jaw (CA-226)
- Manual tong hinge jaw (CA-227)
- Latch (CA-228)
- Hanger (pay special attention to the weld joint area)

Magnetic Particle Inspection

The NOV critical area drawings will indicate which areas are considered as to be critical or non-critical. In general; for load bearing components, in case no critical area drawing exists, the complete component is considered critical. Carry out MPI according to ASME BPVC sub section V, subsection A, article 7 and subsection B, article 25 or ASTM E709 or an equivalent standard.

Machined surfaces shall be examined by the wet fluorecent method, other surfaces shall be examined by wet or dry method.

In case of inspecting a used product the only types of indications one need to consider are cracks with size bigger as 1.6 mm (1/16 inch). All other types of indications have been reviewed when the part was produced and found to be acceptable. In case the defect was not acceptable it must have developed a crack during use and shall be considered relevant.

Evaluations of indications

NOTE: If any relevant indications are found, contact NOV to determine the next course of action. Preferably an inspection report (with photograph or sketch) detailing the serial number of the equipment and the type, length and location of the indication should be presented. NOV will be able to advise the proper and most efficient repair.

- Linear indication: An indication, revealed by NDE, having a length at least three times its width
- Rounded indication: An indication, revealed by NDE, with a circular or elliptical shape and having a length less than three times its width.

Qualifications and certification

All personnel performing and interpreting MPI shall be qualified in accordance with the guidelines of ASNT SNT-TC-1A (latest edition) or an equivalent standard and shall be trained in the use of the reference photographs and the interpretation of the MPI with regard to the acceptance criteria and ASTM E125 reference photographs.

Examination

HT-tongs should be MPI examined according to the maintenance procedures. The areas subject to inspection shall be inspected according to the procedures developed by the user or, alternatively, as per API RP 8B.

Table 1: Acceptance criteria for API 7k equipment

Grey area NOT applicable for MPI for equipment in service.

Type	Discontinuity description	Max. permitted degree critical areas	Max. permitted degree non-critical areas
I	Linear discontinuities (hot tears, cracks)	None, see note	Degree I
II	Shrinkage	Degree II	Degree II
III	Inclusions	Degree II	Degree II
IV	Internal chills and chaplets	Degree I	Degree I
V	Porosity	Degree I	Degree II

Table 2: Acceptance criteria for welds

- No relevant linear indications (1.6 mm (1/16”)
- No rounded indications with a major dimension 3.2 mm (1/8 inch) for welds whose depth is 16 mm (5/8 inch) or less
- No rounded indications with major dimension greater than 5 mm (3/16”) for welds whose depth is greater than 16 mm (5/8 inch)
- No more than 3 relevant indications in a line separated by less than 1.6mm (1/16 inch)

Table 3: Acceptance Criteria for wrought material

- No relevant indications with a major dimension equal or greater than 3/16”
- No more than ten relevant indications in any continuous 6 in^2
- No more than 3 relevant indications in a line separated by less than 1/16” edge to edge
- No relevant indications in pressure sealing areas, in the root area of rotary threads or in stress-relief features of threaded joints.

NOTE: Only a NOV authorized repair facility is allowed to remanufacture HT tongs which have indications outside the acceptance criteria.

Tests

The HT tongs are torque tested after manufacture or repair to 1.5 times their torque rating.

WARNING: HT tongs which have experienced wear or are found to have cracks must be replaced or repaired by a NOV authorized repair facility.

WARNING: Only original NOV-OEM parts must be used. Manual tongs are produced from cast alloy heat treated steel and must not be welded in the field. Improper welding can cause cracks and brittleness in heat-affected areas which can result in dramatic weakening of the part and possible failure. Repairs involving welding and/or machining should be performed only by an NOV authorized repair facility. Using a HT tong that has been improperly welded or repaired is dangerous.

Maximum allowable wear to maintain 100% torque rating

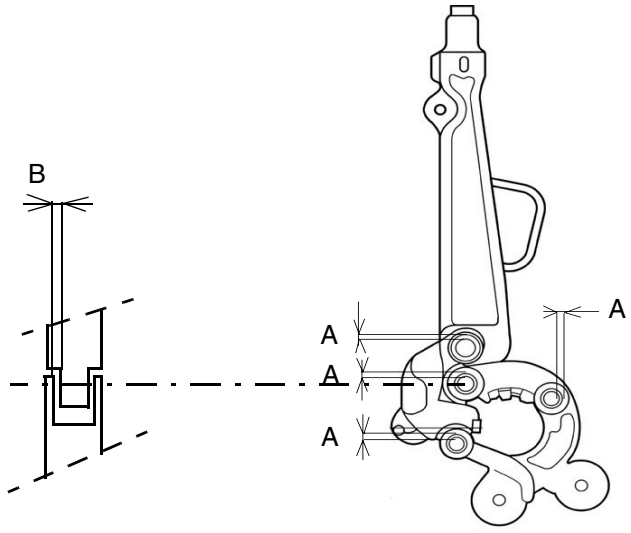

Tong type	Dimension A	Dimension B
	Maximum clearance (inch)	Maximum clearance (inch)
HT 200	0.045	0.035
HT 100	0.035	0.035
HT 65	0.035	0.035
HT 55	0.025	0.035
HT 35	0.030	0.035
HT 14	0.030	0.035
HT 50	0.025	0.035

Shop repairs

Changing dies/inserts

Procedure

1. Remove the cotter pin and take out the retaining pin

⚠ *CAUTION: Wear eye protection when removing or replacing inserts to protect against chip fragments*

2. After replacing the inserts, the retaining pins with the cotter pins shall be reinstalled.

Installation & commissioning

General procedure

1. To install the HT Tong, the tong support line should be connected to a suspension ring.
2. Install the right lug and/or hinge jaw, to cover the correct size range. Ensure that the tong is capable of handling the torque required. See tables in chapter “Specifications”.
3. For easy tong operation, freely suspend tong up by the tong support line as close to the center of the rotary table as is conveniently possible. This reduces the arc of swing and the distance that the tong must travel to the table.
4. With jaws open and free from pipe, balance the tong. Carry this out from lever to latch and from side to side by adjusting the hanger adjustment bolt / screw, and / or the balancing screw. For best operation the long jaw should be about 1” lower than the short jaw.
5. The pull line must than be connected to the end of the lever. A back up line, sized to safely withstand the tong torque rating, should in all cases be connected to secure safe operation.

Page intentionally left blank

Operation

WARNING: Keep hands away from any pinch point or undesignated areas; use the green handles provided for operating the HT tongs. They are colored green within the yellow protective hand grips.

WARNING: Personnel must stay out of working area of tong

WARNING: Ensure snub-line-saver with safety line is in place

Safety information befor use

Pre-job inspection

Before tong use inspect the following:

- tong dies
- both snub lines (ensure proper size and only use factory made, certified lines)
- breakout line
- makeup line
- torque load cell
- counterweight bucket and cable
- all pins, bolts, keepers
- ensure tongs are level

Operation Procedure

With the HT Tong positioned and balanced properly, follow the steps outlined below;

1. Ensure that the correct rated tongs with the correct heads are used for the required tubular torque.
2. Never torque tubular or collars with insufficiently rated tongs.
3. Ensure tong head pin is in the correct hole to assure correct latch position for required torque.
4. Line from cathead and tong should form a 90° angle when connections are being torqued.
5. It is advised to attache a torque-measuring device to the snub line when using multiple lines.
6. Counterweight bucket should be balanced for easy up and down motion.
7. Never hang additional weight outside of tong counterweight bucket. When circumstances require additional weight to be added to tongs, do not tie weight to tong hanger assembly.
8. Before attempting to put tongs on tubular, the tubular should always be stopped and set in the slips.
9. Tongs should be placed in the correct position on the tool joints and not on the hard band or tube.
10. When placing tongs on the tool joint, do not get any part of arm or hand in between the tong and the tool joint.

11. Back up tongs (stationary) should be put on first using handles on tongs only.
12. The man working the bottom tongs should always take care that his hands and fingers are not on the top of the tong handles.
13. Top tongs should then be put on using handles only.
14. Keep your thumb off of the top of the tong handles.
15. When making the tongs bite on the tool joint, hands should be placed in tong handles only.
16. Never stand directly in the path of the rotating tongs during make up or breakout procedures.
17. All personnel should clear the rotary area during make-up and breakout of high torque connections such as drill collars or over torqued connections.
18. After breaking or making connection, bottom tongs should be pushed at tong lever arm to break open and unlatch same.
19. When unlatching tongs, unlatch the bottom tong first to avoid contact with the above tong hanger arm. Always be vigilant with hand placement.
20. Always be aware of snub lines.
21. Keep out of the Driller's line of sight to the rotary table at all times while making and breaking connections.
22. Do not stand on tongs when working above rig floor.
23. Tongs should be tied back out of the way when not in use.

WARNING: HT Tongs are critically loaded tools when torquing up tubular goods. Line pull on lever should ideally be or approach at 90° from the lever center line. This is also the theoretical way to determine the allowable torque. Torque on the tong must not exceed manufacturers rating at any time. To avoid injury in case the tong slips, releases or fails. Rig personnel must be out of tong's travel area on the rig floor.

24. The HT tong can be assembled for either making-up or break-out by removing the hanger and turning the complete HT Tong over.

Snub line saver pn 50006017

A so called "snub line saver" is available. The snub line saver allows both the break an snub line to be hooked to the tong. This snub line saver saves the snub line from wear and tear it sees when it is bent around the end of the tong. The U-clamp is designed to fit over the lever end of HT-65 and HT-100 tong. The U-clamp is captured by the brackets at the lever end and makes the tong line retainer superfluous. The snub line saver is designed according API 7K. The absence of the tong line retainer makes it possible to use the hole in the lever end to be used for a pull back line.

Applying make up torque

Torque is the measurement of the amount of twist applied to two tubulars as they are screwed together. The product of the tong arm length Lt and the line pull F is the measurement of torque, when the tong-arm and the pulling line are at a (90°) angle.

Example:

7 $^{3}/_{4}$" DC with 6 $^{5}/_{8}$" reg. connection has a recommended make-up torque of 58,500 Ft Lbs (79,315 Nm). The HT tong capable of supplying this torque is the HT 65 tong. The length of the tong arm is appr. 4.25 Ft (1.29 m). The force to be applied on the pull line will be:

F = make-up torque / arm lenght = 58,500 / 4.25 = appr. 13,765 Lbs. (79,315 / 1.29 = 61,485 N = appr. 6,000 kg)

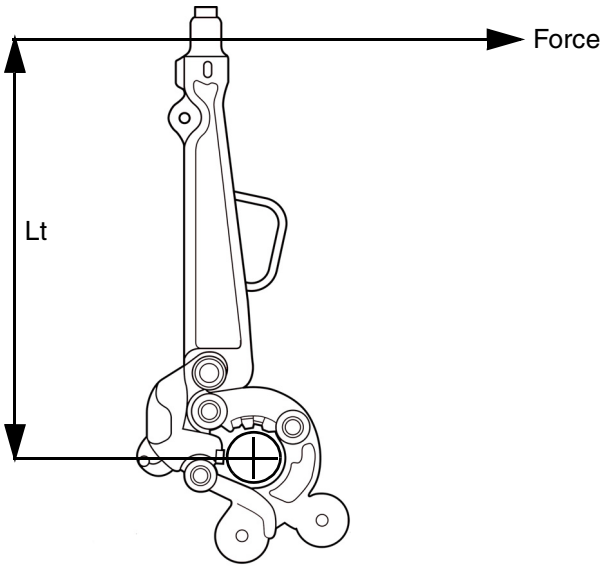

	Appr. Dimensions Lt max		Appr. Dimensions Lt min	
	Ft	**m**	**Ft**	**m**
HT14	2.25	0.69	2.05	0.63
HT35 short lever	3	0.92	2.8	0.85
HT35 long lever	3.95	1.2	3.72	1.13
HT50	Depending on casing head assembly			
HT55 short lever	4.6	1.4	4.25	1.29
HT55 long lever	4.1	1.25	3.85	1.17
HT65	4.95	1.45	4.25	1.29
HT100	5	1.53	4.5	1.37
HT200	5.2	1.59	6.5	2

NOTE: A line-pull measuring device should be used in making-up connections. It is important that the line-pull is measured when the line is at the right 90° angle relative to the tong handle. When applying line-pull to the tong, apply a long steady pull rather than jerking the line.

Direction of pulling

NOTE: In below figure the tongs are NOT the back up tongs, but the ones being used for MU/BO. Below images show TOPVIEWS

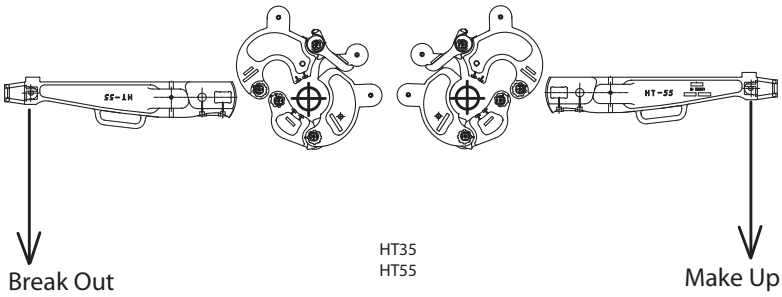

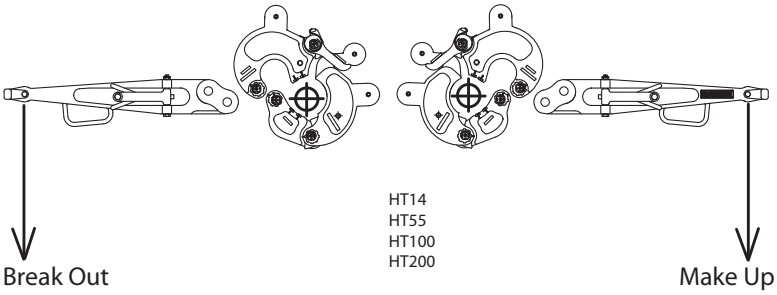

Height of the tool joint

WARNING: Ensure the rotary slips / spider must be designed to withstand the back up torque.

Although not recommended, if only one tong is used with a locked rotary table, height of the tool joint should not exceed that shown in Case I.

Also line pull should not exceed recommended makeup torque with tongs at 90 degrees to the jerk line.

Height above the rotary table can be calculated by means of the following:

In the formula in the figure below:

Hmax = Height of tool joint above slips (ft).

Ym = Minimum tensile yield of tubular (psi)

Grade D = 55,000

Grade E = 75,000

Grade X = 95,000

Grade G =105,000

Grade S =135,000

Lt= Tong arm length (ft, measured on rig)

F = Line pull (lbs)

T = FxL (torque ft-lbs)

I/C = Section Modulus of tubular, inch3, Table B4-1.

Sample calculation:

4.1/2 in, 16.60 lb/ft. Grade E drill tubular, with 4.1/2” in. E.H = 6 in. OD = 3.1/4” ID tool joints.

Tong arm Lt = 3.1/2 ft.

Tongs at 90°

Ym = 75,000 psi (for Grade E)

I/C = 4.27 inch3

T = 18,000 ft-lbs.

Table B4-1 section modulus values

1	2	3
Tubular O.D. (inch)	**Tubular Weight Nominal (lbs/ft)**	**I/C (cu. inch)**
2-3/8	4.85 6.65	0.66 0.87
2-7/8	6.85 10.40	1.12 1.60
3-1/2	9.50 13.30 15.50	1.96 2.57 2.92
4	11.85 14.00 15.70	2.70 3.22 3.58
4-1/2	13.75 16.60 20.00 22.82 24.66 25.50	3.59 4.27 5.17 5.68 6.03 6.19
5	16.25 19.50 25.60	4.86 5.71 7.25
5-1/2	19.20 21.90 24.70	6.11 7.03 7.84
6-5/8	25.20	9.79

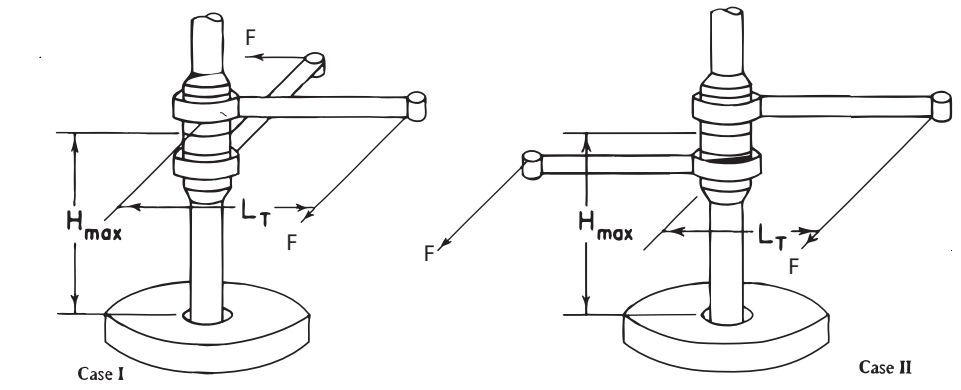

$$H_{max} = \frac{.053\ Y_m\ L_T (I/C)}{T}$$

$$H_{max} = \frac{.038\ Y_m\ L_T (I/C)}{T}$$

Figure B4-9. The sketches and formula's show how to figure height of tool joint above slips.

Assembly

Assembly & dis-assembly

Procedure

1. Disconnect the head assembly from the lever by removing the hinge pins and lock.
2. Disconnect the latch by removing the hinge pin. This allows removal of the latch spring and latch spring plunger.
3. For HT 55 and HT35 tongs remove the latch jaw by removing the hinge pin. This will allow removal of the adjustable stop assembly and booster plunger assembly.
4. Remove all other lug, hinge, short and long jaws by taking out the various hinge pins.
5. Complete disassembly of the various jaws can be done by removing all nuts and bolts.
6. Assembly is the same procedure in reverse.

Disassembly of the hanger and lever assembly

Procedure

1. Disconnect the hanger assembly from the lever by removing the hanger bolt and nut
2. Complete disassembly of the hanger and lever can be carried out by removing all nuts and bolts.
3. Assembly is the same procedure in reverse.

⚠ *CAUTION: Ensure that the orientation of the parts is correct while assembling the HT-tong. For proper order of installation of parts, see exploded views in chapter "Drawings".*

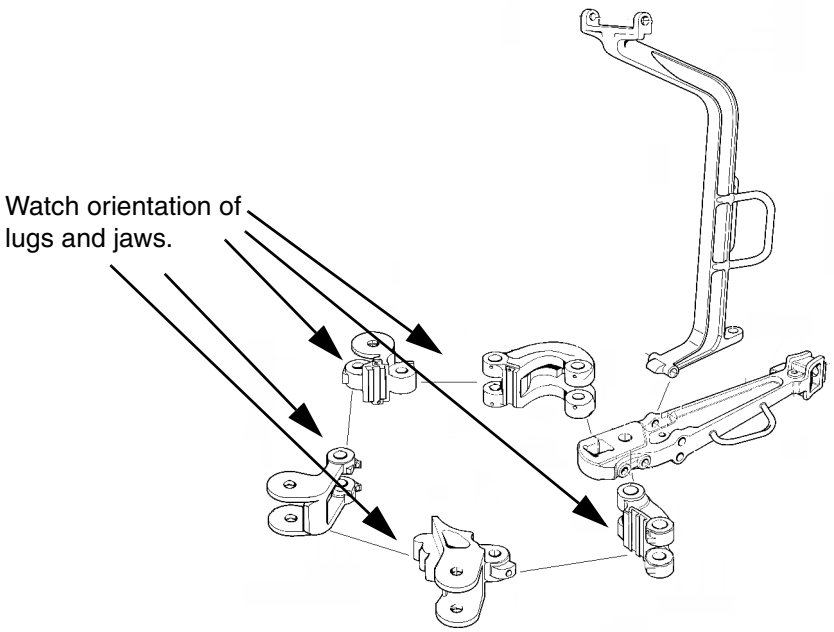

Changing components

Changing dies/inserts

Procedure

1. Remove the cotter pins followed by the retaining pins

⚠ *CAUTION: Wear eye protection when removing or replacing inserts to protect against chip fragments*

2. After replacing the inserts, the retaining pins with the cotter pins shall be reinstalled. Use always NEW cotter pins.

Lug jaw removal for changing sizes

Procedure

1. HT200: Remove the hinge pin by removing the cotter pin from the clevis pin, remove the clevis pin, unscrew and remove the hinge pin.
2. Other then HT200: Remove the cotter pin from the nut, unscrew the nut and remove the hinge pin.
3. Take out the lug jaw and replace by correct sized lug jaw and possible other components needed for the job
4. Relock the pin. Use NEW cotter pins.

Lug jaw HT200 nut removal

Procedure

1. Remove the hinge pin by removing the cotter pin from the clevis pin, remove the clevis pin, unscrew and remove the hinge pin.
2. Drive the groove pins from inside out (HT tong upside down)
3. Take out the nut.

Trouble shooting

When problems cannot be solved, contact an authorized NOV repair facility

Overview possible problems

Problem	Possible cause	Possible solution
Tong does not bite	Worn die	Replace die
	Tong not correctly dressed for size	Check manual for correct dressing for size
	Tong assembled wrongly	Reassemble tong properly
Tong does not hang level	Balancing (eye) bolt not adjusted properly	Adjust balancing (eye) bolt
	Hanger adjustment not adjusted properly	Adjust hanger adjustment screw
Tong does not open OR parts do not move freely.	Yielding due to overload	Replace tong
Bent pins or sheared pin heads	Tong is overloaded	Replace tong
Elongated holes	Tong is overloaded	Replace tong
	Tong holes worn	Check amount of wear. If within acceptance criteria use as is, when over acceptance criteria, replace tong

Page intentionally left blank

Appendixes

Risk assessment acc. to EN12100:2010

Conclusion Risk Assessment

General conclusions

- Ensure training is carried out
- Have knowledge of rig procedures.
- Carry out inspection according to manual
- Work according to procedures in manual
- Ensure snub-line saver is in place with safety line
- Personnel must stay out of working area of tong
- Wear personal safety protection like safety glasses, hard hat etc.

Applicable standards

- EN-ISO 12100:2010 Safety of machinery - Basic concepts, general principles for design - Risk assessment and risk reduction
- Machinery Directive: 2006/42/EC
- API 7K

Reception, storage, transport & decommissioning

NOTE: All exposed, not painted metal surfaces, are coated with a rust preventative at the factory prior to shipment for transport only.

Immediatelly after reception*

Check the tool immediately after reception and re-preserve the tool as required (at the latest within 1 month) as per table below:.

Description	Recommended preservation
All unpainted static steel surface and flanges	Rustilo DWX 32
All unpainted dynamic steel surfaces	Rustilo DWX 32
Extended cylinder rods (retract if possible)	Rustilo DWX 32 + Denso tape*
Exposed bolts and nuts	Rustilo DWX 32
Hydraulic/pneumaticfittings.	Plugs or caps + Denso tape*
Grease fittings supplied with cap.	Cap + Denso tape*
All grease points	Lubricate

* In case long time preservation is ordered; follow procedure TSEL- 0194.

Inspection and test during storage

- All accessible exposed surfaces should be checked and if needed re-preserved periodically (once per 3 months is recommended) to be sure that no corrosion is taking place.

Storage general recommendations

- Store the tool in such a way that it cannot drop, rust or get damaged.
- Every attempt should be made to avoid wide variations in temperature and high humidity. The preferred environment would be clean and dry at 60°F (16° C) ambient. If high humidity is unavoidable, 70° F (21° C) is recommended.
- All openings should be covered to prevent water or dust from entering.

Storage after use

When the tool is not being used for a longer period then 3 days the following steps should be carried out:

- Grease the tool
- Preserve the tool as per table above

Transport

WARNING: Only lift the tool at it's didicated lifting points or ears.

The best way of transporting the tool is in its original crate. Use oiled paper and seal the box with plastic to prevent leaking when stored outside. Secure the top safely.

Decommissioning

The tool may contain grease, steel, rubbers, plastic, stainless steel, mild steel and several assembled components with undefined consistency or mixtures. The tool can be contaminated with drilling fluids, hydraulic fluids and preservatives. After the tool is decommissioned, it is recommended to disassemble the tool in a place where waste fluids can be contained and properly disposed of.

WARNING: Any fluids, mud and grease are potentially unsafe when in contact with the skin. Always wear gloves and safety goggles when disassembling the tool.

1. Clean the tool with a steam cleaner.
2. It is recommended to disassemble the tool in a place where drainage for waste fluids is possible. .

WARNING: Accumulators (if applicable) may contain high pressure gasses or liquids. Refer to the OEM-documentation for safe removal and disposal.

3. Accumulator (if applicable): let all the pressure out and remove the valve. Decontaminate if necessary.
4. Remove the parts.
5. Carry off to proper place for final storage or destruction.

Torque values (US)

		Bolts Lubricated with Light Machine Oil			Bolts lubricated with Anti-seize compound		
		Grade 8			Grade 8		
Dia.	**Threads per inch**	**Min. Torque (ft lb)**	**Max. Torque (ft lb)**	**Clamp force (lb)**	**Min. Torque (ft lb)**	**Max. Torque (ft lb)**	**Clamp force (lb)**
Coarse Thread Series, UNC							
1/4”	20	11.4	12.6	2860	8.6	9.5	2860
5/16”	18	24	26	3720	17.8	19.7	3720
3/8”	16	43	47	7000	32	35	7000
7/16”	14	67	74	9550	50	55	9550
1/2”	13	105	116	12750	78	87	12750
9/16”	12	143	158	16100	107	118	16100
5/8”	11	209	231	20350	157	173	20350
3/4”	10	361	399	30100	271	299	30100
7/8”	9	570	630	41600	428	473	41600
1”	8	855	945	54500	641	709	54400
1 1/8”	7	1216	1344	68700	912	1008	68700
1 1/4”	7	1729	1911	87200	1297	1433	87200
1 3/8”	6	2261	2499	104000	1696	1874	104000
1 1/2”	6	3002	3318	126500	2252	2489	126500

Tensile strength=150,000 psi. Proof strength=120,000 psi.

		Bolts Lubricated with Light Machine Oil			Bolts lubricated with Anti-seize compound		
		Grade 8			Grade 8		
Dia.	**Threads per inch**	**Min. Torque (ft lb)**	**Max. Torque (ft lb)**	**Clamp force (lb)**	**Min. Torque (ft lb)**	**Max. Torque (ft lb)**	**Clamp force (lb)**
Fine Thread Series, UNF							
1/4”	28	13.3189	14.7	3280	10	11	3280
5/16”	24	24	26	5220	17.8	19.7	5220
3/8”	24	48	53	7900	36	39	7900
7/16”	20	76	84	10700	57	63	10700
1/2”	20	114	126	14400	86	95	14400
9/16”	18	162	179	18250	121	134	18250
5/8”	18	228	252	23000	171	189	23000
3/4”	16	399	441	33600	299	331	33600
7/8”	14	627	693	45800	470	520	45800
1”	14	950	1050	59700	713	788	59700
1 1/8”	12	1368	1512	77000	1026	1134	77000
1 1/4”	12	1900	2100	96600	1425	1565	96600
1 3/8”	12	2584	2856	118400	1938	2142	118400
1 1/2”	12	3382	3738	142200	2537	2804	142200

Tensile strength=150,000 psi. Proof strength=120,000 psi.

Torque values (metric)

		Bolts Lubricated with Light Machine Oil			Bolts lubricated with Anti-seize compound		
		Grade 8			Grade 8		
Diameter	**Threads per inch**	**Min. Torque (Nm)**	**Max. Torque (Nm)**	**Clamp force (N)**	**Min. Torque (Nm)**	**Max. Torque (Nm)**	**Clamp force (N)**
Coarse Thread Series, UNC							
1/4”	20	15.5	17.14	12870	11.7	12.9	12870
5/16”	18	32.6	35.4	16740	24.2	26.8	16740
3/8”	16	58.5	64	32500	43.5	47.6	31500
7/16”	14	91.1	100.6	42980	68	92.5	42980
1/2”	13	143	158	57380	106	118	57380
9/16”	12	195	215	72450	145.5	160	72450
5/8”	11	284	314	91580	213.5	235	91580
3/4”	10	491	542	135450	368	407	135450
7/8”	9	775	857	187200	582	643	187200
1”	8	1163	1285	245250	872	965	245250
1 1/8”	7	1654	1828	309150	1240	1370	309150
1 1/4”	7	2351	2598	382400	1764	1949	392400
1 3/8”	6	3075	3398	468000	2306	2549	468000
1 1/2”	6	4082	4512	569250	3062	3385	569250

		Bolts Lubricated with Light Machine Oil			Bolts lubricated with Anti-seize compound		
		Grade 8			Grade 8		
Diameter	**Threads per inch**	**Min. Torque (Nm)**	**Max. Torque (Nm)**	**Clamp force (N)**	**Min. Torque (Nm)**	**Max. Torque (Nm)**	**Clamp force (N)**
Fine Thread Series, UNF							
1/4”	28	18.1	20	14760	13.6	15	14760
5/16”	24	32.6	35	23490	24.2	26.8	23490
3/8”	24	65.3	72	35550	49	53	35550
7/16”	20	103	114	48150	77.5	86	48150
1/2”	20	155	171	64800	117	129	64800
9/16”	18	220	239	82130	165	182	82130
5/8”	18	310	343	103500	232	257	103500
3/4”	16	542	600	151200	406	450	151200
7/8”	14	853	943	206100	639	707	206100
1”	14	1292	1428	268650	970	1071	268650
1 1/8”	12	1860	2056	346500	1396	1542	346500
1 1/4”	12	2584	2856	434700	1938	2128	434700
1 3/8”	12	3514	3884	532800	2635	2913	532800
1 1/2”	12	4599	5083	639900	3450	3813	639900

Tensile Strength = 1,034,214KPa to 1” dia. Proof Strength = 827,370 kPa

Drawings

Parts lists and exploded views

NOTE: In the exploded views on the following pages, several parts, especially the jaw assemblies, are not shown. In this chapter you will find these parts.

Below “additional parts” are not mentioned in the exploded views,

Additional parts

TOPVIEW

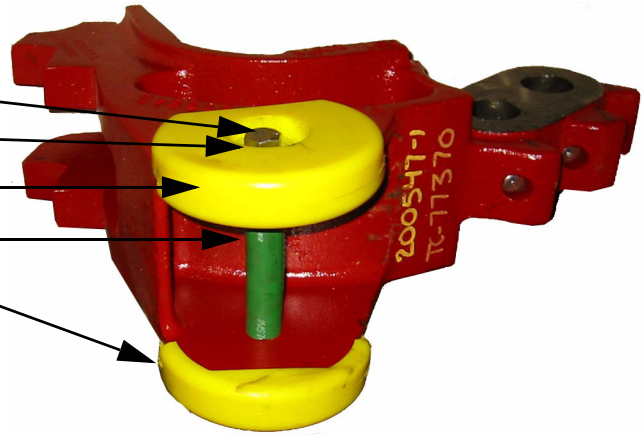

BOTTOM VIEW

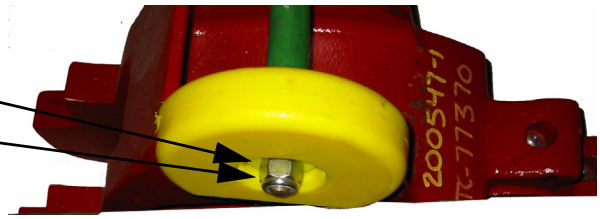

HT14: Per grip point

Qty	Name	Part number
1	Handle bolt	50010-52-C8
1	Grip hose	203439
1	Nut, self locking	51850-10-C
2	Plastic safety cap	250369
2	Washer, flat	50810-R-C

HT35: Per grip point

Qty	Name	Part number
1	Handle bolt	50010-52-C8
1	Handle bolt (long jaw)	50010-60-C8
1	Grip hose	203439
1	Nut	51850-10-C
2	Plastic safety cap	250369
2	Flat washer	50810-R-C

HT55: Per grip point

Qty	Name	Part number
1	Handle bolt	50010-60-C8
1	Grip hose	203439
1	Nut, self locking	51850-10-C
2	Plastic safety cap	250369
2	Washer flat	50810-R-C

HT65: Per grip point

Qty	Name	Part number
1	Handle bolt	50010-60-C8
1	Handle bolt (short jaw)	50010-54-C8
1	Grip hose	203439
1	Nut, self locking	51850-10-C
2	Plastic safety cap	250369
2	Washer flat	50810-R-C

HT100: Per grip point

Qty	Name	Part number
1	Handle Bolt	50010-60-C8
1	Grip hose	203439
1	Nut, self locking	51850-10-C
2	Plastic safety cap	250369
2	Washer flat	50810-R-C

HT200: Per grip point		
Qty	**Name**	**Part number**
1	Handle bolt	50010- 76-C8
1	Grip hose	203439
1	Nut, self locking	51850-10-C
2	Plastic safety cap	250369
2	Washers, flat	50810-R-C

Parts list HT 14 manual tong

Item.No	No. Req	Description	Part no.	Item.No	No. Req	Description	Part no.
	1	**Lever ass'y**	**200641-1**	25	1	Plunjer pin	23922
1	**1**	**Lever**	**(note 1)**	26	1	Grease fitting	53201
2	1	Tong line pin retainer	23918				
3	1	Safety line bolt	939099-204	27	1	Latch spring	23920
4	1	Safety line bolt nut	50508-C	28	4	Hinge pin	200649
5	1	Cotter pin	51402-8	29	4	Hinge pin nut	8150
6	1	Name plate	26119-1	30	4	Cotter pin	51435-20
7	4	Drive screw	53301-4-5	**Range 2 $^{3}/_{8}$"- 3 $^{1}/_{2}$"**			
8	2	Grease fitting	53201		**1**	**Lug jaw ass'y**	**200645-1**
	1	**Hanger ass'y**	**200650-1**	**31**	**1**	**Lug jaw**	**(note 1)**
9	**1**	**Hanger**	**(note 1)**	32	1	Grease fitting	53201
10	1	Hanger bolt	939099-165	**Range 3 $^{1}/_{2}$"- 5"**			
11	1	Hanger bolt nut	50510-C		**1**	**Lug jaw ass'y**	**200646-1**
12	1	Cotter pin	51402-12	**31**	**1**	**Lug jaw**	**(note 1)**
13	1	Hanger adjustment screw	939168-96	32	1	Grease fitting	53201
14	1	Hanger jam nut	50312-C	**Range 4 $^{3}/_{4}$"-6 $^{1}/_{4}$"**			
					1	**Lug jaw ass'y**	**200647-1**
	1	**Long jaw ass'y**	**200642-1**	**31**	**1**	**Lug jaw**	**(note 1)**
15	**1**	**Long jaw**	**(note 1)**	32	1	Grease fitting	53201
16	1	Die	16401-6	**Range 5 $^{3}/_{4}$"-7"**			
17	2	Retainer pin	BJ 17194		**1**	**Lug jaw ass'y**	**200648-1**
18	2	Cotter pin	51402-6	**31**	**1**	**Lug jaw**	**(note 1)**
	1	**Short jaw ass'y**	**200643-1**	32	1	Grease fitting	53201
19	**1**	**Short jaw**	**(note 1)**	**Not in drawing**			
20	1	Die	16401-6	-	-	Warning label	201350
21	2	Retainer pin	BJ 17194	-	-	Warning label	52319
22	2	Cotter pin	51402-6				
	1	**Latch ass'y**	**200644-1**				
23	**1**	**Latch**	**(note 1)**	For part numbers gripping points see page 9-32			
24	1	Latch spring plunger	23915	Note 1: Available as ass'y only			

Exploded view HT14

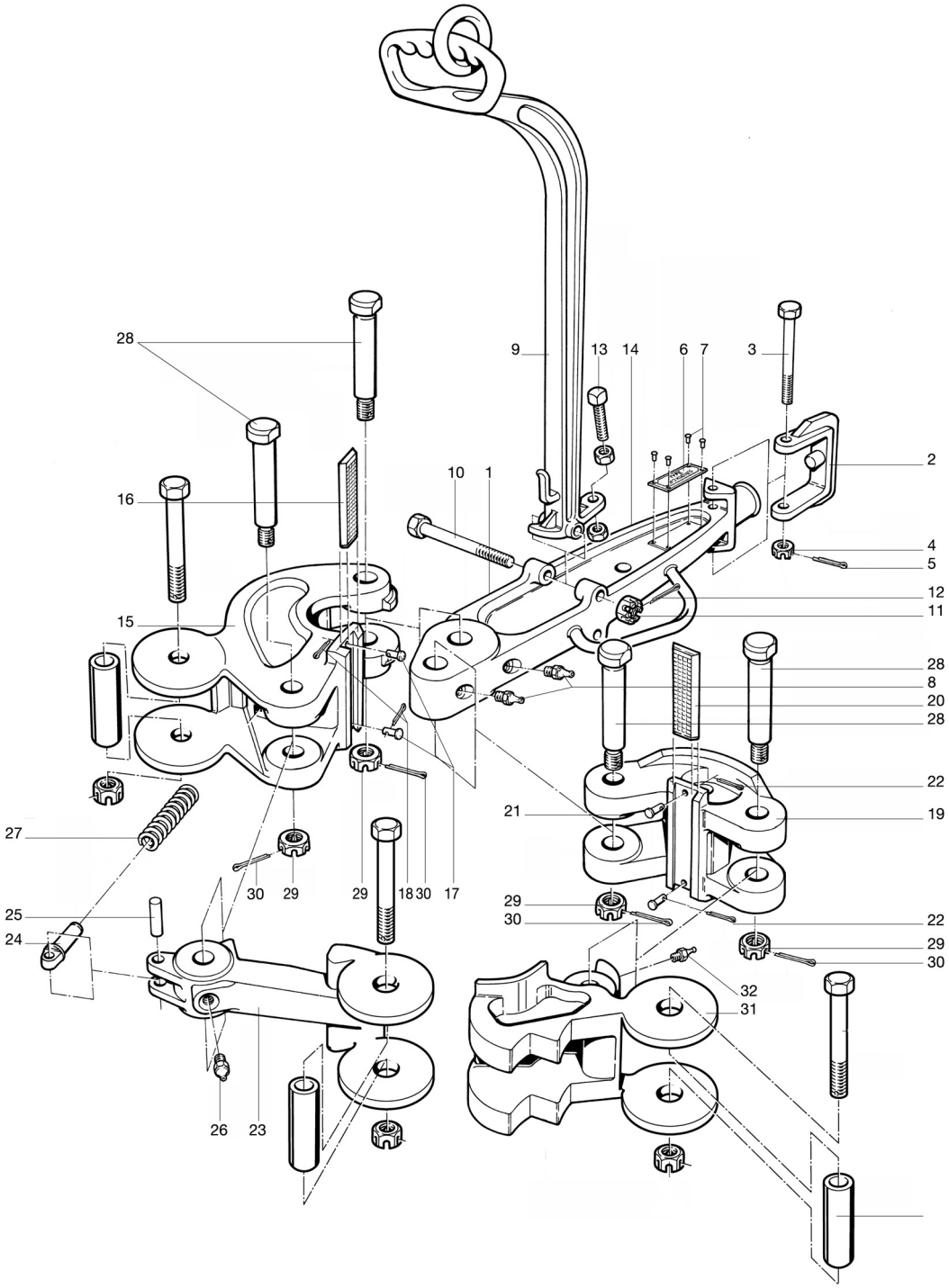

Parts list HT 35 manual tong

Item.No	No. Req	Description	Part no.
	1	**Long lever ass'y**	**200621-1**
1	1	**Long lever**	**(note 1)**
	1	**Short lever ass'y**	**200622-1**
1	1	**Short lever**	**(note 1)**
2	1	Tong line pin	200633
3	1	Tong line pin retainer	25468
4	1	Safety line bolt	939099-109
5	1	Safety line bolt nut	50512-C
6	1	Cotter pin	51402-16
7	1	Name plate	26119-1
8	4	Drive screw	53301-4-5
9	2	Grease fitting	53201
16	1	Hanger bolt	50012-56-C8T
17	1	Hanger bolt nut	50212-C
18	1	Cotter pin	51402-16
	1	**Hanger ass'y**	**200630-1**
10	1	**Hanger**	**(note 1)**
11	1	Balancing screw	12586
12	1	Balancing screw bolt	939099-596
13	1	Balancing screw bolt nut	50512-C
14	1	Cotter pin	51402-16
15	1	Suspension ring	BJ 12863
19	1	Hanger adjustment screw	203438-1
20	2	Hanger jam nut	50314-C
	1	**Long jaw ass'y**	**200623-1**
21	1	**Long jaw**	**(note 1)**
22	1	Die	16401-6
23	2	Retainer pin	BJ 17194
24	2	Cotter pin	51402-6
25	1	Hinge pin nut	200632
26	2	Groove pin	51506-8
	1	**Short jaw ass'y 2 $^{3}/_{8}$"-7"**	**200625-1**
27	1	**Short jaw 2 $^{3}/_{8}$"-7"**	**(note 1)**
	1	**Short jaw ass'y 7 $^{5}/_{8}$"- 10 $^{3}/_{4}$"**	**200624-1**
27	1	**Short jaw 7 $^{5}/_{8}$"- 10 $^{3}/_{4}$"**	**(note 1)**
28	2	Die	16401-6
29	4	Retainer pin	BJ 17194
30	4	Cotter pin	51402-6
31	2	Hinge pin nut	200632
32	4	Groove pin	51506-8

Item.No	No. Req	Description	Part no.
	1	**Latch ass'y**	**200626-1**
33	1	**Latch**	**(note 1)**
34	1	Hinge pin nut	200632
35	2	Groove pin	51506-8
36	2	Latch spring	9561
37	1	Hinge pin block	200631
38	4	Hinge pin threaded	200629
39	4	Dowel pin	11199
40	4	Cotter pin	51402-6
Range 2 $^{3}/_{8}$"-3 $^{11}/_{16}$"			
	1	**Lug jaw ass'y**	**200076-1**
41	1	**Lug jaw**	**(note 1)**
Range 2 $^{7}/_{8}$"-4 $^{1}/_{4}$"			
	1	**Lug jaw ass'y**	**200077-1**
41	1	**Lug jaw**	**(note 1)**
Range 3 $^{1}/_{2}$"-5 $^{1}/_{4}$"			
	1	**Lug jaw ass'y**	**200078-1**
41	1	**Lug jaw**	**(note 1)**
Range 5 $^{1}/_{4}$"-7"			
	1	**Lug jaw assy**	**200079-1**
41	1	**Lug jaw**	**(note 1)**
Range 7"-8 $^{5}/_{8}$"			
-	1	**Hinge & Lug jaw ass'y (not shown)**	**200080-2**
-	1	**Hinge jaw ass'y (not shown)**	**200627-1**
Range 7"-8 $^{5}/_{8}$"			
	1	**Lug jaw ass'y**	**200080-1**
41	1	**Lug jaw**	**(note 1)**
Range 9 $^{5}/_{8}$"-10 $^{3}/_{4}$"			
-	1	**Hinge & Lug jaw ass'y (not shown)**	**200081-2**
-	1	**Hinge ass'y (not shown)**	**200628-1**
Range 9 $^{5}/_{8}$"-10 $^{3}/_{4}$"			
41	1	**Lug jaw ass'y**	**200081-1**
41	1	**Lug jaw**	**(note 1)**
42	1	Die	16402-6
43	2	Retainer pin	BJ 17194
44	2	Cotter pin	51402-6
45	2	Grease fitting	53201
Not in drawing			
-	-	Warning label	52319
-	-	Warning label	201350

Note 1: Available as ass'y only

For part numbers gripping points, see page 9-32

Exploded view HT35

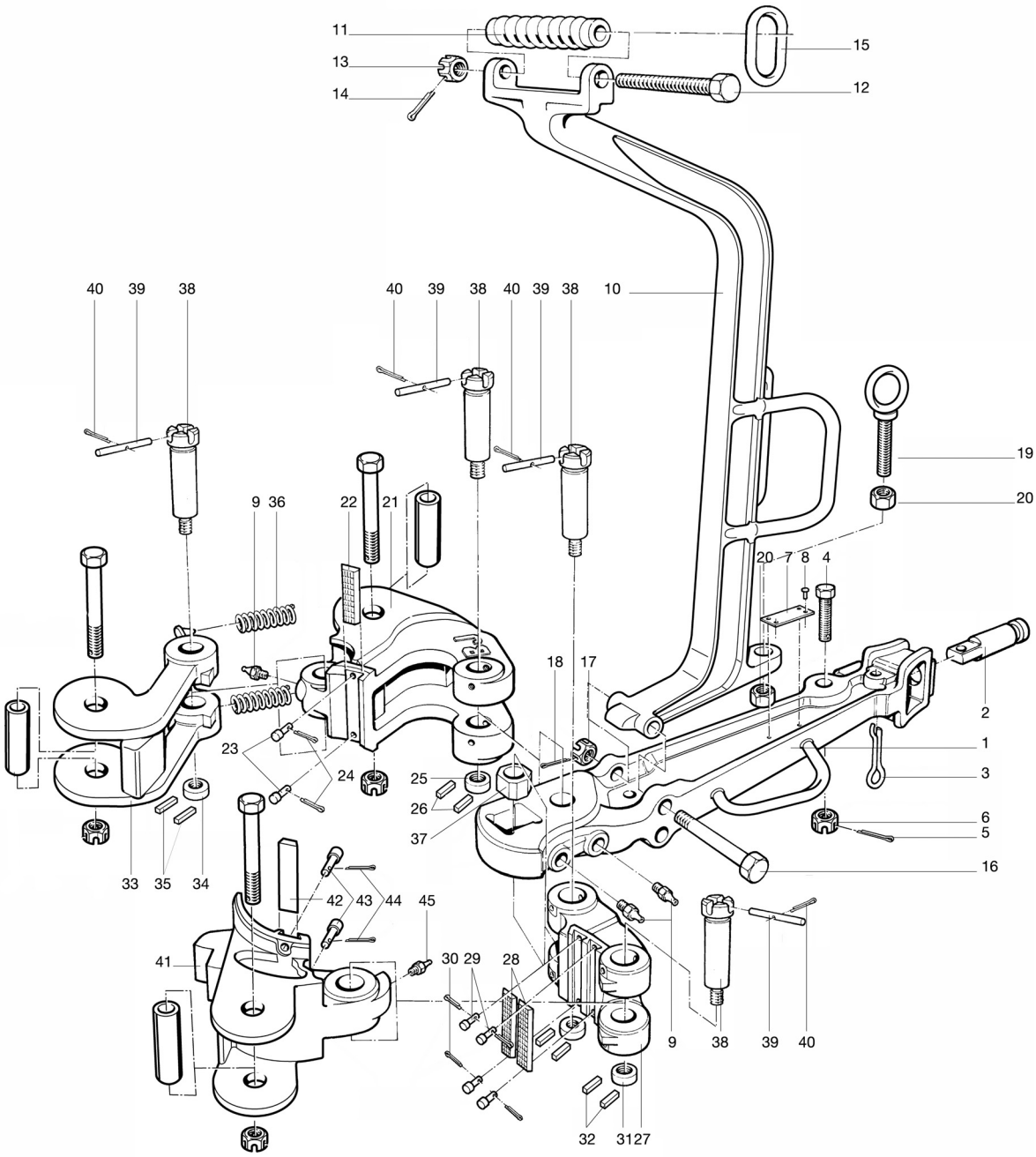

Parts list HT 55 manual tong

Item.No	No. Req	Description	Part no.
	1	**Long lever ass'y**	**200561-1**
1	**1**	**Long lever**	**(note 1)**
	1	**Short lever ass'y**	**200562-1**
1	**1**	**Short lever**	**(note 1)**
2	1	Tong line pin	200570
3	1	Tong line pin retainer	25468
4	1	Name plate	200568
5	4	Drive screw	53301-4-5
6	2	Grease fitting	53201
13	1	Hanger bolt	939099-556
14	1	Hanger bolt nut	50512-C
15	1	Cotter pin	51402-16
	1	**Hanger ass'y**	**203344-36**
7	**1**	**Hanger**	**(note 1 & 2)**
8	1	Balancing screw	12586
9	1	Balancing screw bolt	939099-596
10	1	Balancing screw bolt nut	50512-C
11	1	Cotter pin	51402-16
12	1	Suspension ring	BJ 12863
16	1	Hanger adjustment screw	203438-1
17	2	Hanger jam nut	50314-C
	1	**Long jaw ass'y**	**200563-1**
18	**1**	**Long jaw**	**(note 1)**
19	1	Adjustable stop	11139
20	1	Adjustable stop plunger	11144
21	1	Adjustable stop spring	11192
22	1	Adjustable stop bolt	11191
23	1	Adjustable stop bolt nut	8150
24	1	Cotter pin	51402-14
25	1	Booster plunger	200571
26	1	Booster plunger spring	11229
27	1	Booster spring ret. plug	53000-16
28	1	Die	16402-6
29	2	Retainer pin	BJ 17194
30	2	Cotter pin	51402-6
31	2	Hinge pin nut	200572
32	4	Groove pin	51506-8
	1	**Short jaw ass'y**	**200564-1**
33	**1**	**Short jaw**	**(note 1)**
34	2	Die	16402-6
35	4	Retainer pin	BJ 17194
36	4	Cotter pin	51402-6
37	2	Hinge pin nut	200572
38	2	Groove pin	51506-8

Item.No	No. Req	Description	Part no.
	1	**Latch jaw ass'y**	**200566-1**
39	**1**	**Latch jaw**	**(note 1)**
40	1	Die	16402-6
41	2	Retainer pin	BJ 17194
42	2	Cotter pin	51402-6
43	2	Grease fitting	53201
	1	**Latch ass'y**	**200565-1**
44	**1**	**Latch**	**(note 1)**
45	1	Hinge pin nut	200572
46	2	Groove pin	51506-8
47	2	Latch spring	9561
48	1	Hinge pin block	200569
49	5	Hinge pin threaded	200567
50	5	Dowel pin	11199
51	5	Cotter pin	51402-6
Range 3 $^1/_2$" - 5"			
	1	**Lug jaw ass'y**	**200083-1**
52	**1**	**Lug jaw**	**(note 1)**
Range 5" - 6 $^3/_4$"			
	1	**Lug jaw ass'y**	**200084-1**
52	**1**	**Lug jaw**	**(note 1)**
Range 6 $^5/_8$" - 9"			
	1	**Lug jaw ass'y**	**200085-1**
52	**1**	**Lug jaw**	**(note 1)**
Range 9" - 10 $^3/_4$"			
	1	**Lug jaw ass'y**	**200086-1**
52	**1**	**Lug jaw**	**(note 1)**
Range 11 $^3/_4$"			
	1	**Lug jaw ass'y**	**200087-1**
52	**1**	**Lug jaw**	**(note 1)**
Range 12 $^3/_4$" - 13"			
	1	**Lug jaw ass'y**	**200089-1**
52	**1**	**Lug jaw**	**(note 1)**
Range 13 $^3/_8$"			
	1	**Lug jaw ass'y**	**200090-1**
52	**1**	**Lug jaw**	**(note 1)**
53	1	Die	16402-6 *
54	2	Retainer pin	BJ 17194 *
55	2	Cotter pin	51402-6 *
56	1	Grease fitting	53201
Not in drawing			
-	-	Warning label	52319
-	-	Warning label	201350

For grip points, see page 9-32

Note 1: Available as ass'y only , * = from 11 $^3/_4$" die only

Note 2: Also available in lenght of 48" and 96"

Exploded view HT55

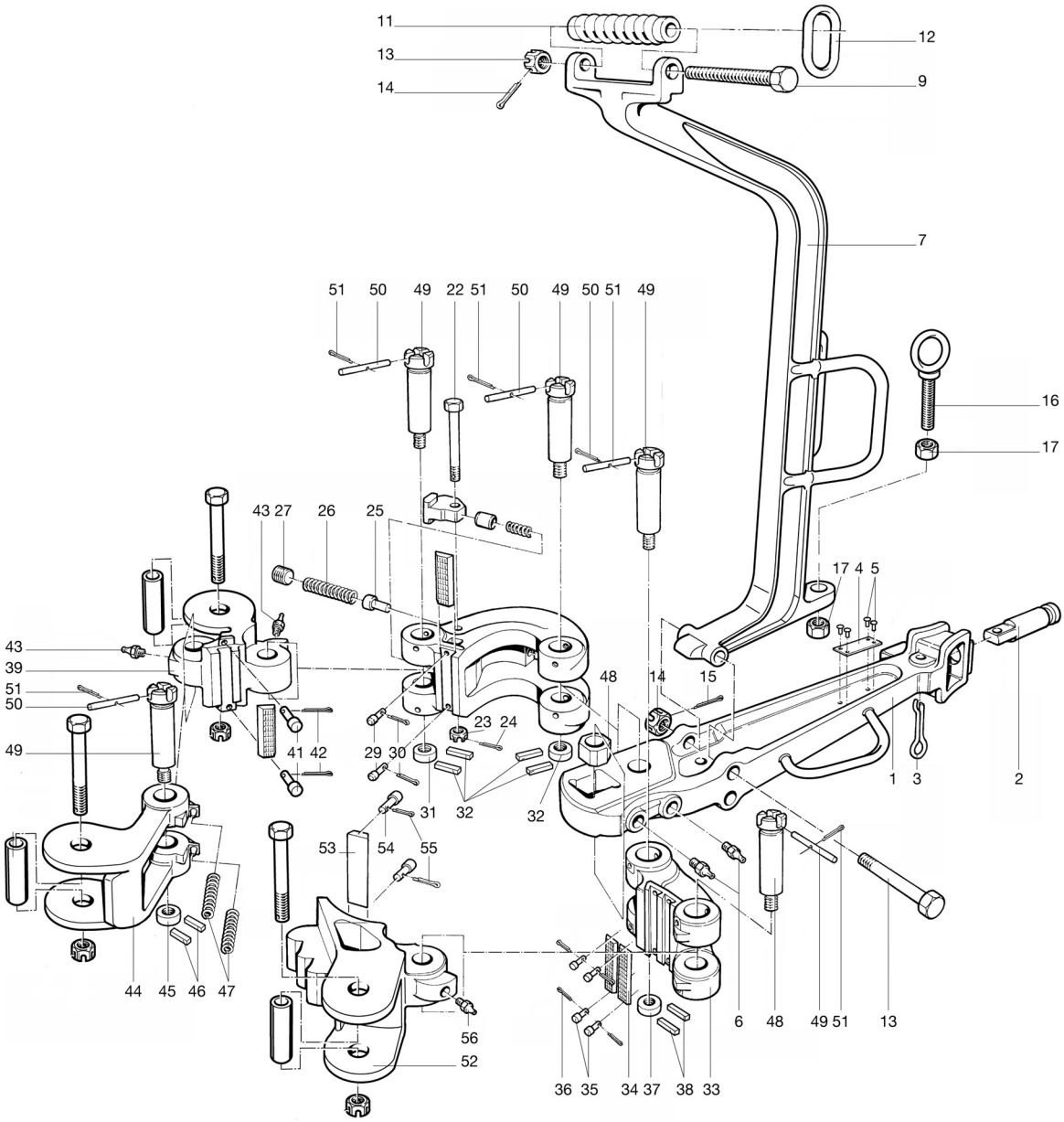

Part list HT 65 manual tong

Item No	No. Req	Description	Part no.	Item No	No. Req	Description	Part no.
	1	**Lever ass'y**	**200541-1**	36	1	Latch spring	24525
1	**1**	**Lever**	**(note 1)**	37	4	Hinge pin	200550
2	1	Tong line retainer	24529	38	4	Hinge pin nut	24528
3	1	Tong line retainer bolt	24249	39	4	Cotter pin	51405-24-S
4	1	Plain washer	50809-N-C	**Range 3 $^1/_2$" - 8 $^1/_4$"**			
5	1	Cotter pin	51402-8		**1**	**Lug jaw ass'y**	**200546-1**
6	1	Name plate	200551	**40**	**1**	**Lug jaw**	**(note 1)**
7	4	Drive screw	53301-4-5	41	1	Die	16402-6
8	2	Grease fitting	53201	42	2	Die retaining pin	BJ 17194
15	1	Hanger bolt	939099-546	43	2	Cotter pin	51402-6
16	1	Hanger bolt nut	50512-C	44	2	Grease fitting	53201
17	1	Cotter pin	51402-6	**Range 8" - 11 $^1/_4$"**			
	1	**Hanger ass'y**	**203344-36**		**1**	**Lug jaw ass'y**	**200547-1**
9	**1**	**Hanger**	**(note 1&2)**	**40**	**1**	**Lug jaw**	**(note 1)**
10	1	Balancing screw	12586	**44**	**2**	**Grease fitting**	**53201**
11	1	Balancing screw bolt	939099-596	**Range 11 $^3/_4$" - 14 $^3/_8$"**			
12	1	Balancing screw bolt nut	50512-C		**1**	**Lug jaw ass'y**	**200548-1**
13	1	Cotter pin	51402-16	**40**	**1**	**Lug jaw**	**(note 1)**
14	1	Suspension ring	BJ 12863	**Range 16" - 17"**			
18	1	Hanger adjustment screw	203438-1		**1**	**Lug jaw ass'y**	**200549-1**
19	2	Hanger jam nut	50314-C	**40**	**1**	**Lug jaw**	**(note 1)**
	1	**Long jaw ass'y**	**200542-1**		**1**	**Hinge jaw ass'y 8 $^1/_2$" - 17"**	**200545-1**
20	**1**	**Long jaw**	**(note 1)**	**45**	**1**	**Hinge jaw**	**(note 1)**
21	2	Die	16402-6	46	3	Grease fitting	53201
22	4	Retaining pin	BJ 17194	47	1	Hinge pin	200550
23	4	Cotter pin	51402-6	48	1	Hinge pin nut	24528
	1	**Short jaw ass'y**	**200543-1**	49	1	Cotter pin	51405-24
24	**1**	**Short jaw**	**(note 1)**	**Not in drawing**			
25	1	Die	16402-6	-	-	Warning label	52319
26	2	Retainer pin	BJ 17194	-	-	Warning label	201350
27	2	Cotter pin	51402-6				
28	1	Short jaw handle	25864				
29	1	Bolt	50012-52-C8				
30	1	Nut	50212-C				
31	1	Lock washer	50912-C				
	1	**Latch ass'y**	**200544-1**				
32	**1**	**Latch**	**(note 1)**				
33	1	Latch spring plunger	24526	For part numbers grip points, see page 9-32			
34	1	Plunger pin	24530	Note 1: Available as ass'y only			
35	1	Grease fitting	53201	Note 2: Also available in lenght of 48" and 96"			

Exploded view HT65

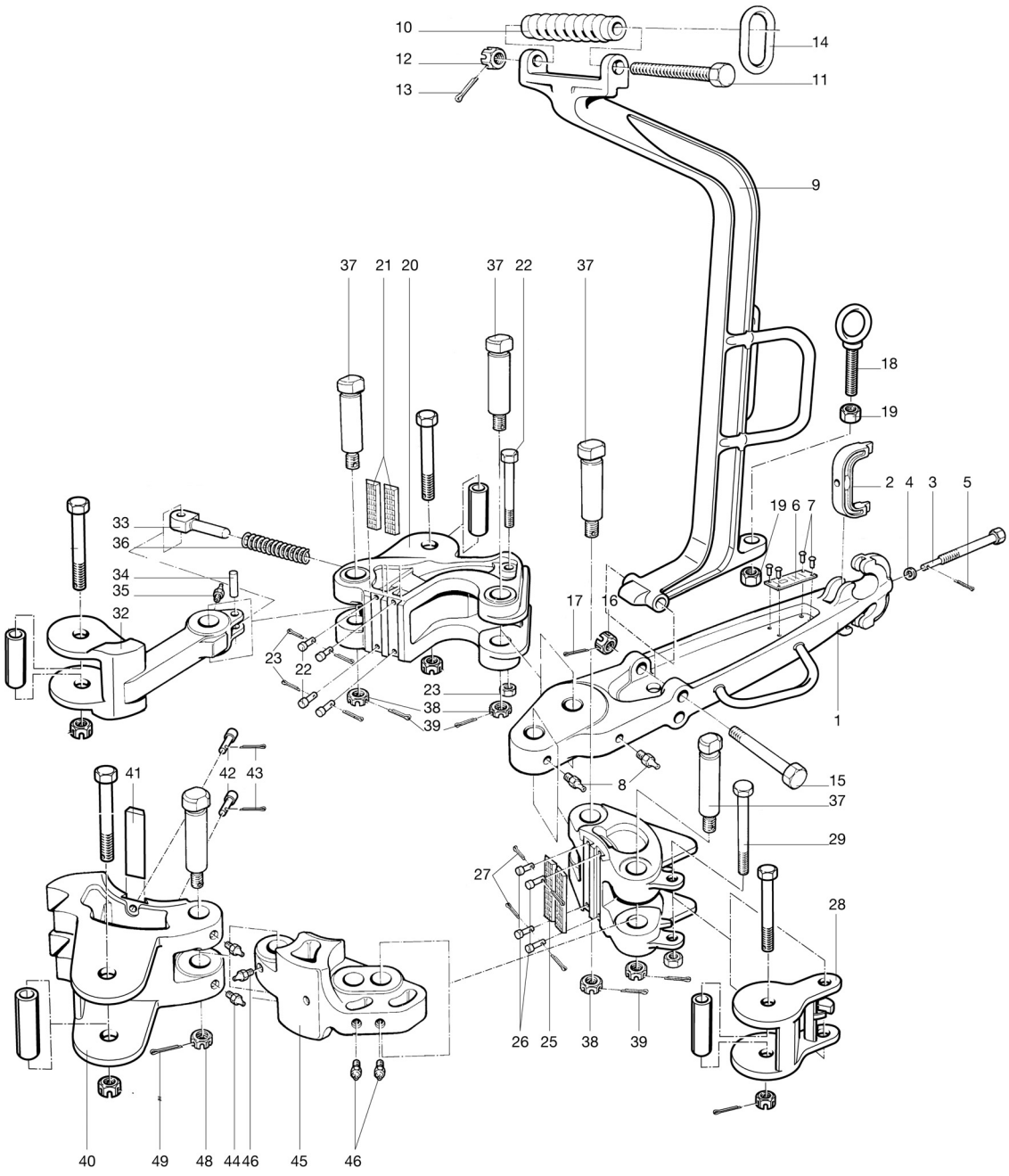

Parts list HT100 manual tong

Item.No	No. Req	Description	Part no.
	1	**Lever ass'y**	**200661-1**
1	**1**	**Lever**	**(note 1)**
2	1	Tong line retainer	24529
3	1	Tong line retainer bolt	24249
4	1	Cotter pin	51402-8
5	1	Name plate	200669
6	4	Drive screw	53301-4-5
7	2	Grease fitting	53201
14	1	Hanger bolt	939099-556
15	1	Hanger bolt nut	50512-C
16	1	Cotter pin	50402-16
	1	**Hanger ass'y**	**203344-36**
8	**1**	**Hanger**	**(note 1&2)**
9	1	Balancing screw	12586
10	1	Balancing screw bolt	939099-596
11	1	Balancing screw bolt nut	50512-C
12	1	Cotter pin	51402-16
13	1	Suspension ring	BJ 12863
17	1	Hanger adjustment screw	203438-1
18	2	Hanger jam nut	50314-C
	1	**Long jaw ass'y**	**200072-1**
19	**1**	**Long jaw**	**(note 1)**
20	2	Die	16401-6
21	4	Retaining pin	BJ 17194
22	4	Cotter pin	51402-6
23	1	Bolt	50012-56-C8
24	1	Nut	50212-C
	1	**Short jaw ass'y**	**200074-1**
25	**1**	**Short jaw**	**(note 1)**
26	2	Die	16401-6
27	4	Retainer pin	BJ 17194
28	4	Cotter pin	51402-6
29	1	Bolt	939107-516
30	1	Nut	50214-C
	1	**Latch ass'y**	**200073-1**
31	**1**	**Latch**	**(note 1)**
32	1	Latch spring plunger	24526
33	1	Plunger pin	24530
34	1	Grease fitting	53201

Item.No	No. Req	Description	Part no.
35	1	Latch spring	24525
36	4	Hinge pin	200204
37	4	Hinge pin nut	24528
38	4	Cotter pin	51405-24-S
49	1	Flat washer	50809-N-C
Range 4" - 8 $^1/_2$"			
	1	**Lug jaw ass'y 4"-8 $^1/_2$"**	**200663-1**
39	**1**	**Lug jaw**	**(note 1)**
40	1	Die	16401-6
41	2	Die retaining pin	BJ 17194
42	2	Cotter pin	51402-6
43	2	Grease fitting	53201
Range 8 $^1/_2$" - 12"			
	1	**Lug jaw ass'y**	**200664**
39	**1**	**Lug jaw**	**(note 1)**
Range 12" - 15"			
	1	**Lug jaw ass'y**	**200665**
39	**1**	**Lug jaw**	**(note 1)**
Range 15 $^3/_4$"			
	1	**Lug jaw ass'y**	**200666**
39	**1**	**Lug jaw**	**(note 1)**
Range 16" - 17"			
	1	**Lug jaw ass'y**	**200667**
39	**1**	**Lug jaw**	**(note 1)**
		Hinge jaw ass'y 8 $^1/_2$" - 17"	**200662-1**
44	**1**	**Hinge jaw**	**(note 1)**
45	3	Grease fitting	53201
46	1	Hinge pin	200204
47	1	Hinge pin nut	24528
48	1	Cotter pin	51405-20
Not in drawing			
-	-	Warning label	52319
-	-	Warning label	201350
For part numbers grip points, see page 9-33			
Note 1: Available as ass'y only			
Note 2: Also available in lenght of 48" and 96"			

Exploded view HT100

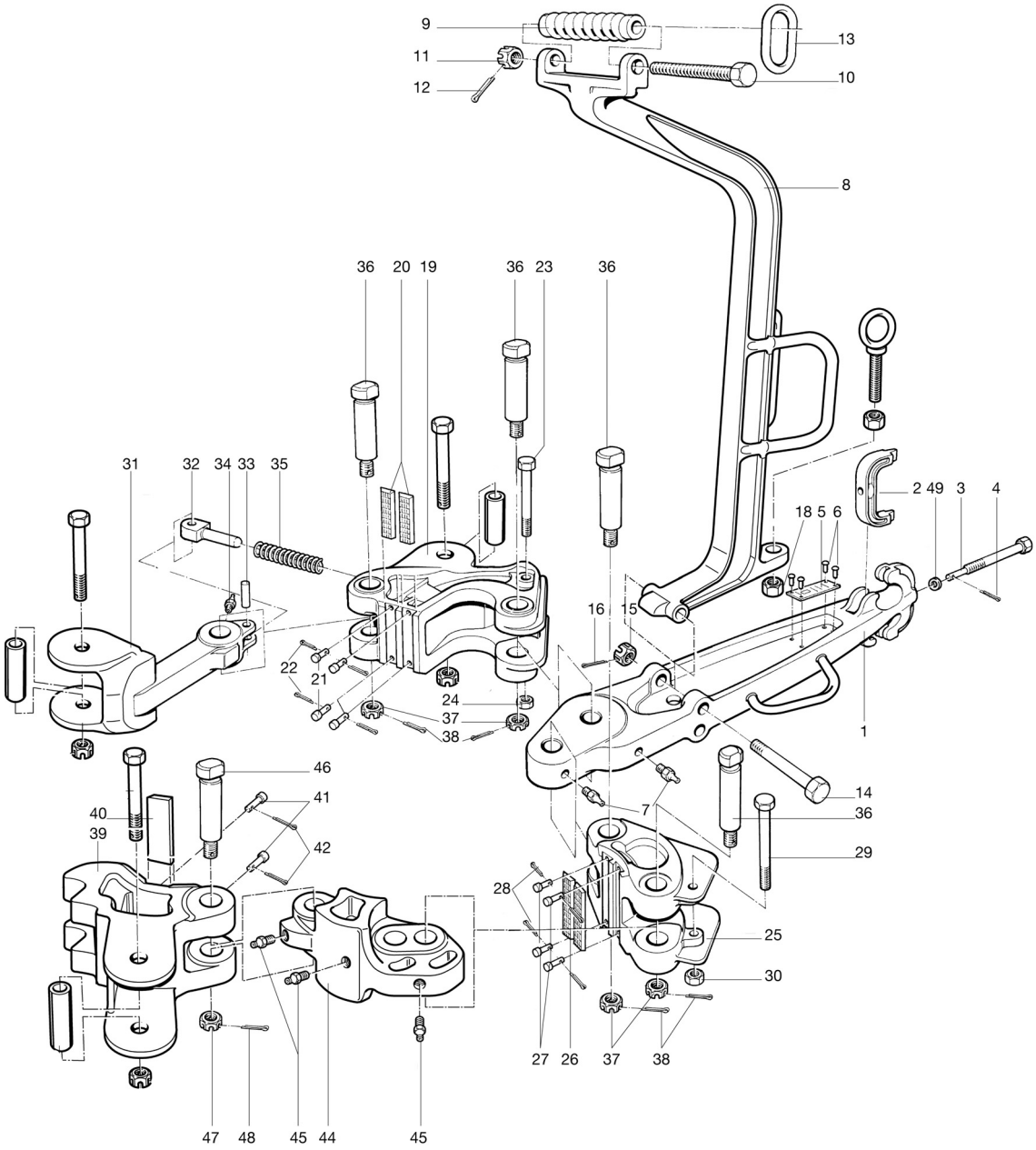

Parts list HT200 manual tong

Item.No	No. Req	Description	Part no.	Item.No	No. Req	Description	Part no.
	1	**Lever ass'y**	**200501-1**	Opt.	1	**Air lift ass'y**	**30041-1**
1	**1**	**Lever**	**(note 1)**	**Range 6"-7 $^{7}/_{8}$"**			
2	1	Tong line retainer	24529		**1**	**Lug jaw ass'y**	**200506-SP**
3	1	Tong line retainer bolt	24249	**36**	**1**	**Lug jaw**	**(note 1)**
4	1	Cotter pin	51402-8	37	1	Coarse die	33562
5	2	Grease fitting	53201	38	10	Die retainer spirol pin	51405-16
12	1	Hanger bolt	939099-801	39	2	Grease fitting	53201
13	1	Hanger bolt nut	50514-C		1	Die carrier (range 6" to 7-7/8" ; not shown)	200512
10	1	Cotter pin	51402-16	**Range 8"-9 $^{5}/_{8}$" or 11 $^{1}/_{2}$"-13 $^{1}/_{4}$"**			
	1	**Hanger ass'y**	**203344-48**		**1**	**Lug jaw ass'y**	**200506-1**
6	**1**	**Hanger**	**(note 1)**	**36**	**1**	**Lug jaw**	**(note 1)**
7	1	Balancing screw	12586	37	1	Coarse die	33562
8	1	Balancing screw bolt	939099-596	38	2	Die retainer spirol pin	947129-194
9	1	Balancing screw bolt nut	50512-C	39	2	Grease fitting	53201
10	1	Cotter pin	51402-16	**Range 9 $^{1}/_{2}$"-11 $^{1}/_{8}$" or 13"-14 $^{3}/_{4}$"**			
11	1	Suspension ring	BJ 12863		**1**	**Lug jaw ass'y**	**200507-1**
15	1	Hanger adjustment screw	203438	**36**	**1**	**Lug jaw**	**(note 1)**
14	2	Hanger jam nut	50314-C				
	1	**Long jaw ass'y**	**200502-1**	39	2	Grease fitting	53201
16	**1**	**Long jaw**	**(note 1)**	**Range 11"-12 $^{1}/_{2}$" or 14 $^{3}/_{8}$"-16"**			
17	2	Coarse die	33562		**1**	**Lug jaw ass'y**	**200508-1**
18	2	Die retainer spirol pin	947129-194	**36**	**1**	**Lug jaw**	**(note 1)**
19	2	Grease fitting	53201	39	2	Grease fitting	53201
21	1	Hinge pin nut	200510		**1**	**Hinge jaw ass'y 11 $^{1}/_{2}$"-16"**	**200505-1**
22	2	Groove pin	51506-8	**40**	**1**	**Hinge jaw**	**(note 1)**
	1	**Short jaw ass'y**	**200503-1**	41	2	Grease fitting	53201
22	**1**	**Short jaw**	**(note 1)**	42	1	Hinge pin	200509
23	2	Coarse die	33562	43	1	Clevis pin	56405-40-SHP
24	2	Die retainer spirol pin	947129-194	44	1	Cotter pin	51402-8
25	4	Hinge pin nut	200510	45	1	Hinge pin nut	200510
26	2	Groove pin	51506-8	46	2	Groove pin	51506-8
	1	**Latch ass'y**	**200504-1**	**Not in drawing**			
27	**1**	**Latch**	**(note 1)**	-	-	Warning label	201350
28	1	Latch clevis	33561	-	-	Warning label	52319
29	1	Latch clevis pin	33563				
30	1	Hinge pin nut	200510				
31	2	Groove pin	51506-8				
32	1	Latch clevis spring	33570				
33	4	Hinge pin	200509				
34	4	Clevis pin	56405-40-SHP	For part numbers grip points, see elswhere in this manual			
35	4	Cotter pin	51402-8	Note 1: Available as ass'y only. see DWG 200506-SP for dressing jaw purposes only.			
47	1	Flat washer	50809-N-C	Note 2: Also available in lenght of 48" and 96"			

Exploded view HT200

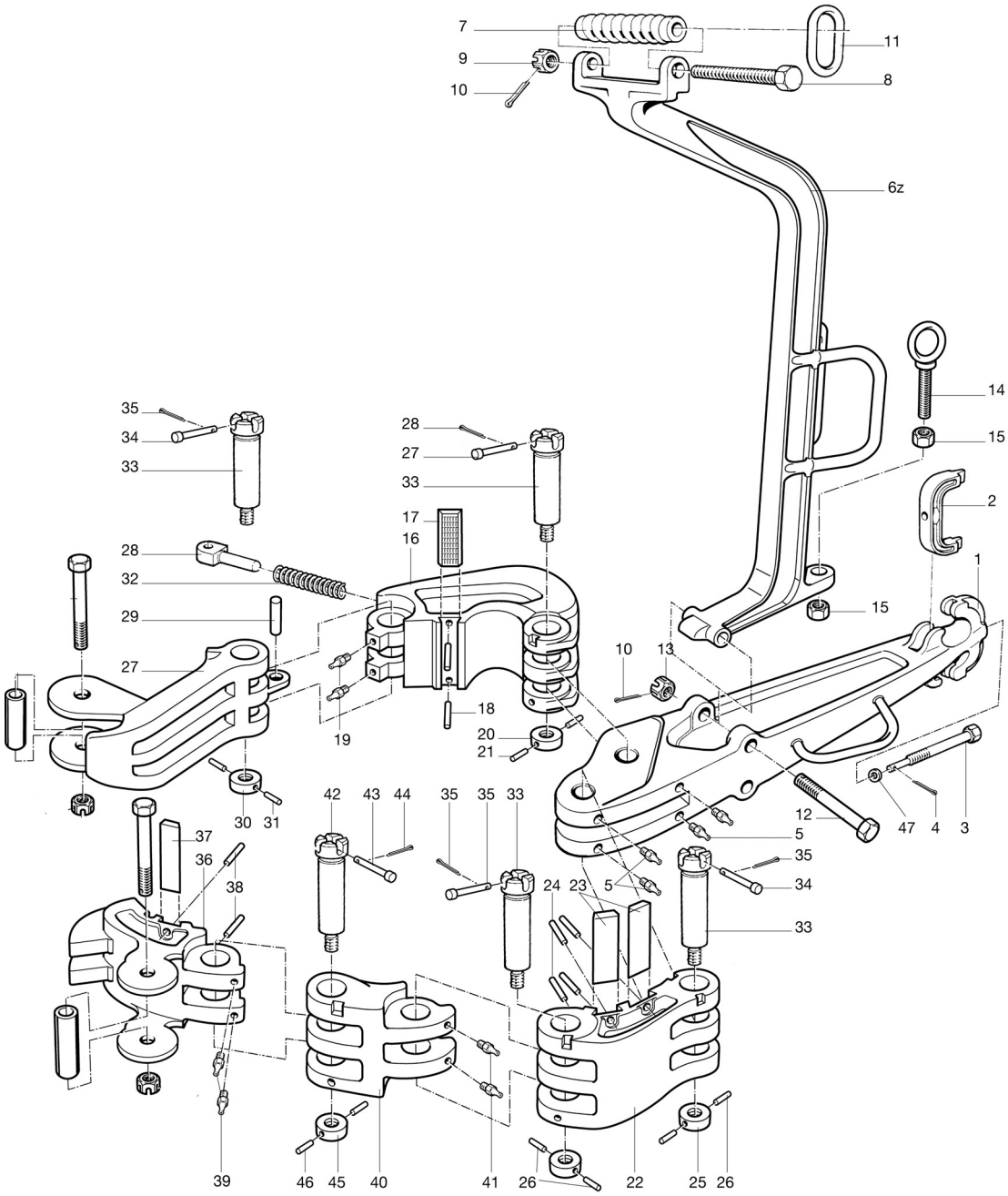

See part number 30041-1 for air lift assembly for HT200 tong.

Air lift assembly HT200

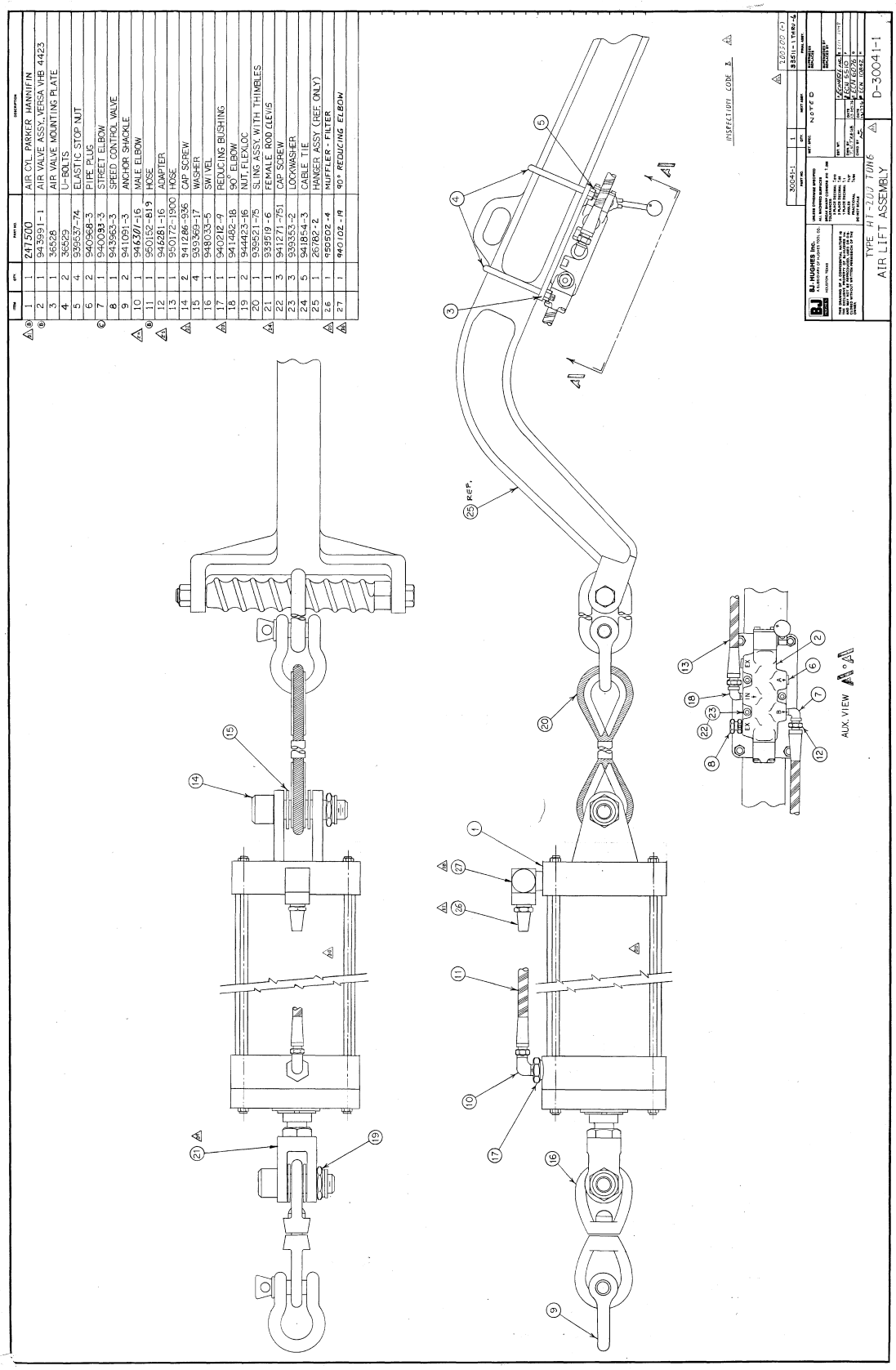

Special dressing of HT200

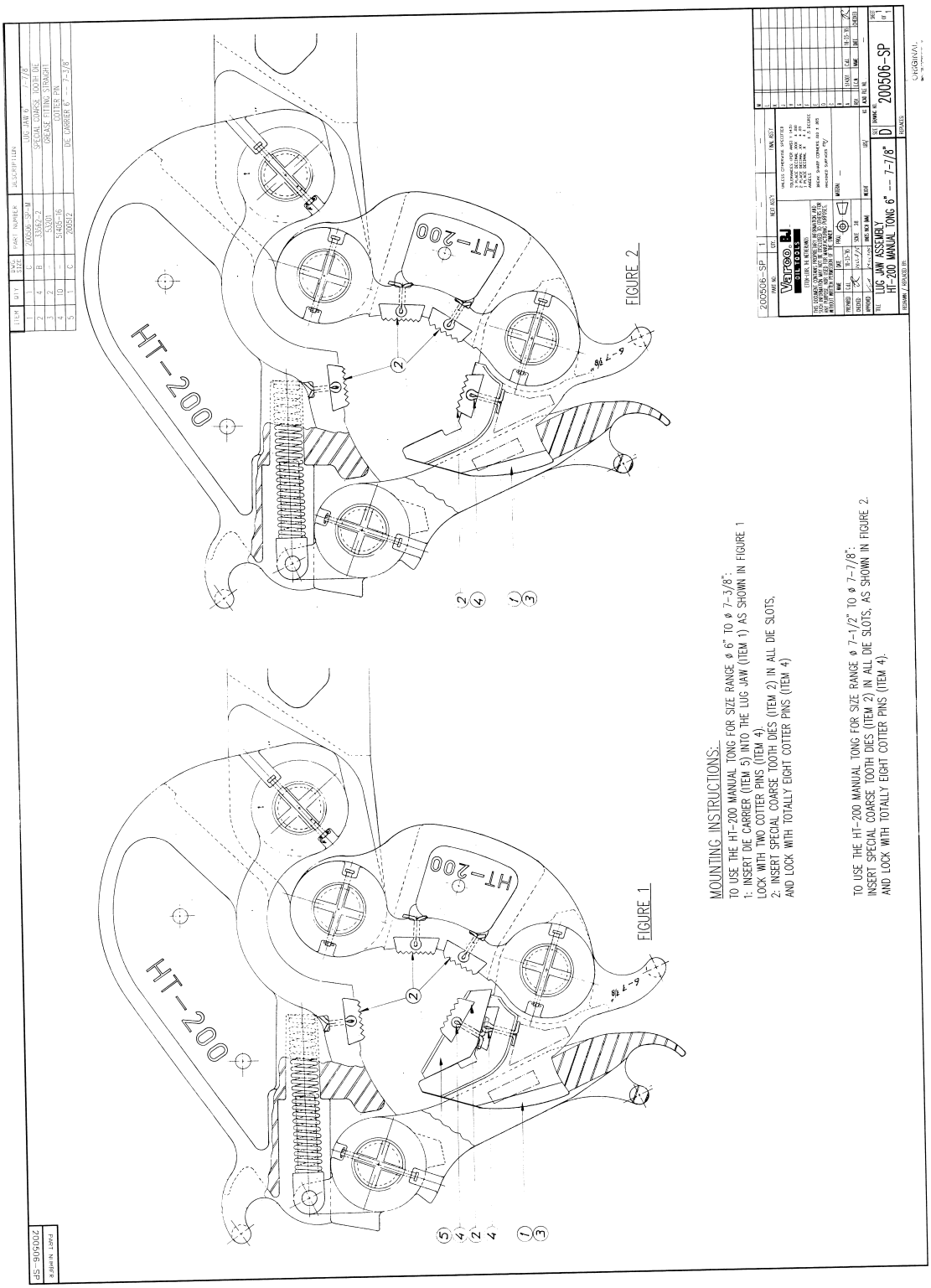

Casing head assemblies overview

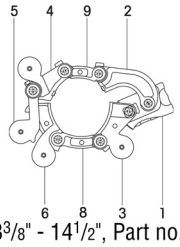

Fig A, 13 3/8" - 14 1/2", Part no. 200580-1

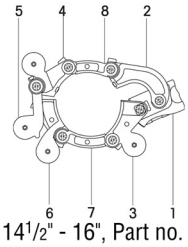

Fig B, 14 1/2" - 16", Part no. 200580-2

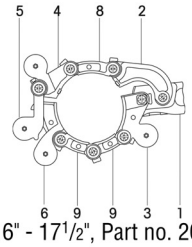

Fig C, 16" - 17 1/2", Part no. 200580-3

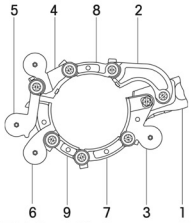

Fig D, 17 1/2" - 19", Part no. 200580-4

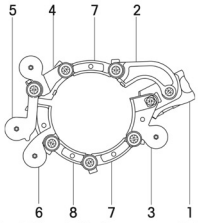

Fig E, 19" - 20", Part no. 200580-5

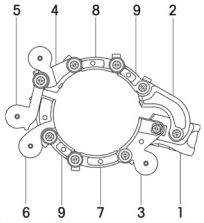

Fig F, 20" - 21 1/2", Part no. 200580-6

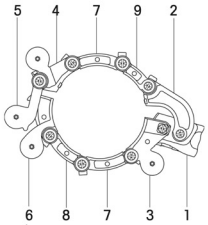

Fig G, 21 1/2" - 23", Part no. 200580-7

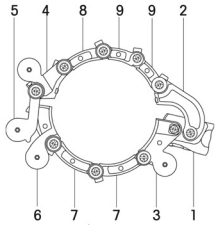

Fig H, 24" - 25 1/2", Part no. 200580-8

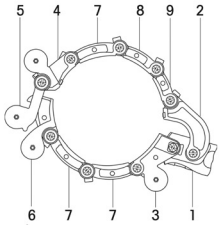

Fig I, 25 1/2" - 27", Part no. 200600-1

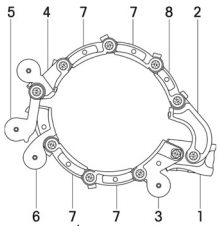

Fig J, 27" - 28 1/2", Part no. 200600-2

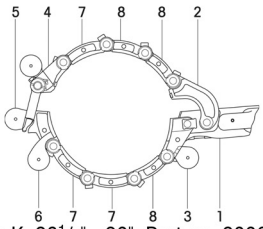

Fig K, 28 1/2" - 30", Part no. 200600-3

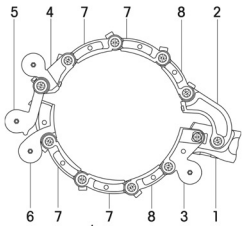

Fig L, 30 " - 31 1/2", Part no. 200600-4

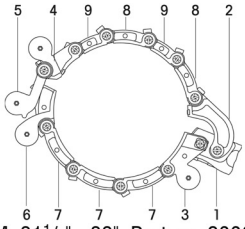

Fig M, 31 1/2" - 33", Part no. 200600-5

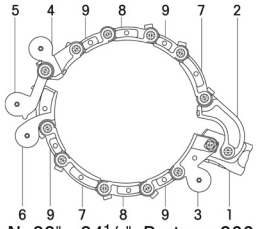

Fig N, 33" - 34 1/2", Part no. 200600-6

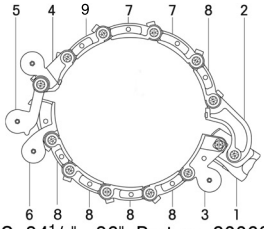

Fig O, 34 1/2" - 36", Part no. 200600-7

Parts list HT 50 casing head assemblies

		Fig. A	Fig. B	Fig.C	Fig. D	Fig.E	Fig F	Fig G	Fig.H	
	pn#	200580-1	200580-2	200580-3	200580-4	200580-5	200580-6	200580-7	200580-8	
Ref.	Description	No. req.	No. req.	No. req.	No. req.	No. req.	No. req.	No. req.	No. req.	pn#
1	Lever ass'y									
2	Long jaw ass'y	1	1	1	1	1	1	1	1	200581-1
3	Short jaw ass'y	1	1	1	1	1	1	1	1	200582-1
4	Latch jaw ass'y	1	1	1	1	1	1	1	1	2005831-1
5	Latch ass'y	1	1	1	1	1	1	1	1	200565-1
6	Latch lug jaw ass'y	1	1	1	1	1	1	1	1	200587-1
7	Hinge jaw ass'y A	-	1	-	1	2	1	2	2	200584-1
8	Hinge jaw ass'y B	1	1	1	1	1	1	1	1	200585-1
9	Hinge jaw ass'y C	1	-	2	1	-	2	1	2	200586-1
-	Hinge pin block	1	1	1	1	1	1	1	1	200569
-	Latch spring	2	2	2	2	2	2	2	2	9561
-	Hinge pin threaded	7	7	8	8	8	9	9	10	200567
-	Dowel pin	7	7	8	8	8	9	9	10	11199
-	Cotter pin	7	7	8	8	8	9	9	10	51402-6
-	Hinge pin nut	7	7	8	8	8	9	9	10	200572
-	Die	2	2	2	2	2	2	2	2	16402-6
-	Handle bolt	4	4	4	4	4	4	4	4	50010-54-C8
-	Nut	4	4	4	4	4	4	4	4	50510-C
-	Rubber hose	4	4	4	4	4	4	4	4	203439
-	Cotter pin	4	4	4	4	4	4	4	4	51435-12
-	Warning label	1	1	1	1	1	1	1	1	201350

		Fig I.	Fig J	Fig. K	Fig. L	Fig. M	Fig. N	Fig.O	
		200600-1	200600-2	200600-3	200600-4	200600-5	200600-6	200600-7	
Ref.	Description	No. req.	No. req.	No. req.	No. req.	No. req.	No. req.	No. req.	Part no.
1	Lever ass'y								
2	Long jaw ass'y	1	1	1	1	1	1	1	200601-1
3	Short jaw ass'y	1	1	1	1	1	1	1	200602-1
4	Latch jaw ass'y	1	1	1	1	1	1	1	200603-1
5	Latch ass'y	1	1	1	1	1	1	1	200565-1
6	Latch lug jaw ass'y	1	1	1	1	1	1	1	200607-1
7	Hinge jaw ass'y D	3	4	3	4	3	2	2	200604-1
8	Hinge jaw ass'y E	1	1	3	2	2	2	5	200605-1
9	Hinge jaw ass'y F	1	-	-	-	2	4	1	200606-1
-	Hinge pin block	1	1	1	1	1	1	1	200569
-	Latch spring	2	2	2	2	2	2	2	9561
-	Hinge pin threaded	10	10	11	11	12	13	13	200567
-	Dowel pin	10	10	11	11	12	13	13	11199
-	Cotter pin	10	10	11	11	12	13	13	51402-6
-	Hinge pin nut	10	10	11	11	12	13	13	200572

		Fig I.	Fig J	Fig. K	Fig. L	Fig. M	Fig. N	Fig.O	
		200600-1	200600-2	200600-3	200600-4	200600-5	200600-6	200600-7	
Ref.	**Description**	**No. req.**	**No. req.**	**No. req.**	**No. req.**	**No. req.**	**No. req.**	**No. req.**	**Part no.**
-	Die	2	2	2	2	2	2	2	16402-6
-	Handle bolt	4	4	4	4	4	4	4	50010-54-C8
-	Nut	4	4	4	4	4	4	4	50510-C
-	Rubber hose	4	4	4	4	4	4	4	203439
-	Cotter pin	4	4	4	4	4	4	4	51435-12
-	Warning label	1	1	1	1	1	1	1	201350

Range	Casing head assy pn#	Range	Casing head assy pn#	Range	Casing head assy pn#
13 $^{3}/_{8}$" to 14 $^{1}/_{2}$"	200580-1	20" to 21 $^{1}/_{2}$"	200580-6	28 $^{1}/_{2}$" to 30"	200600-3
14 $^{1}/_{2}$" to 16"	200580-2	21 $^{1}/_{2}$" to 23"	200580-7	30" to 31 $^{5}/_{8}$"	200600-4
16" to 17 $^{1}/_{2}$"	200580-3	24" to 25$^{1}/_{2}$"	200580-8	31 $^{1}/_{2}$" to 33"	200600-5
17 $^{1}/_{2}$" to 19"	200580-4	25 $^{1}/_{2}$" to 27"	200600-1	33" to 34 $^{1}/_{2}$"	200600-6
19" to 20"	200580-5	27" to 17 $^{1}/_{2}$"	200600-2	34 $^{1}/_{2}$" to 36"	200600-7

Snub line saver

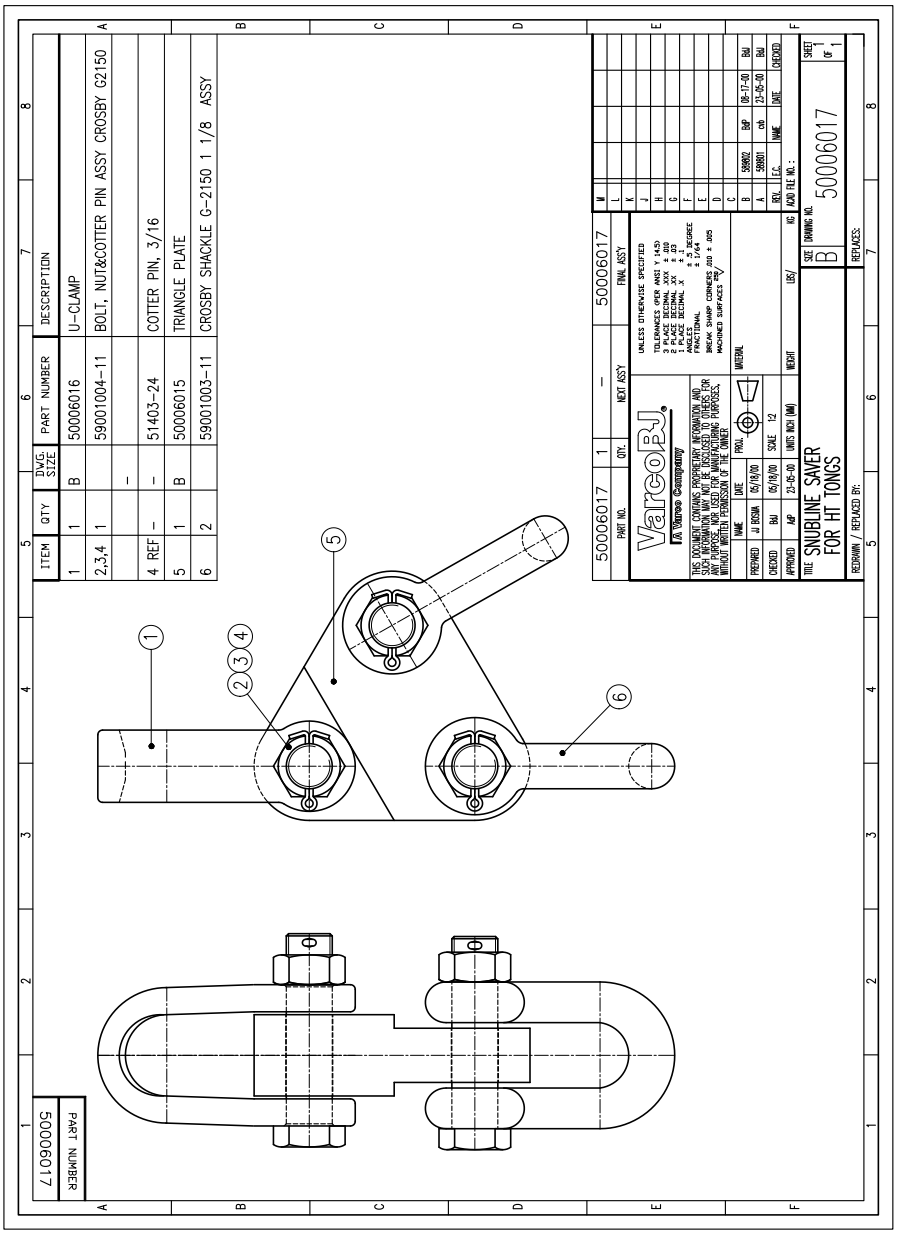

Critical area drawings

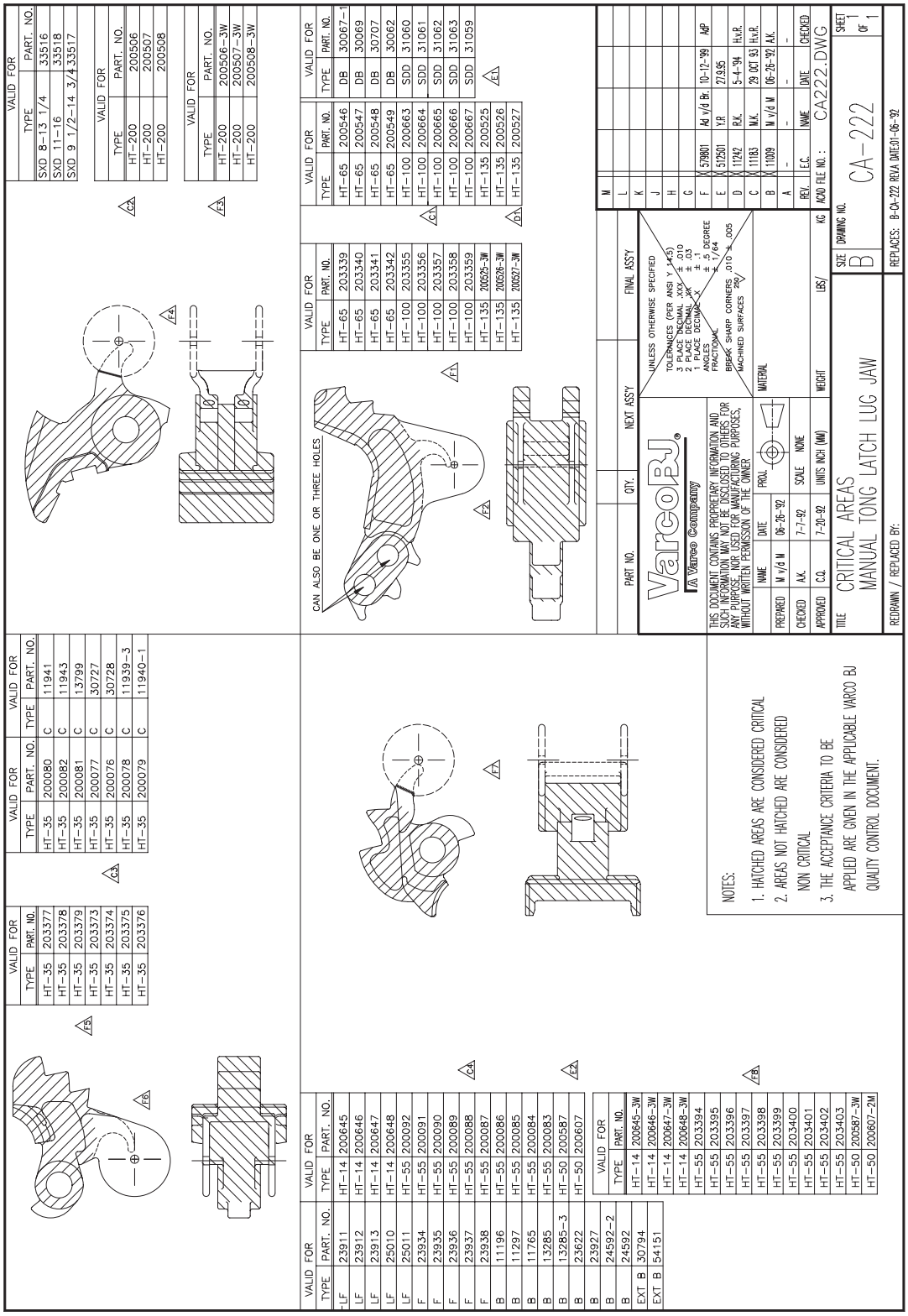

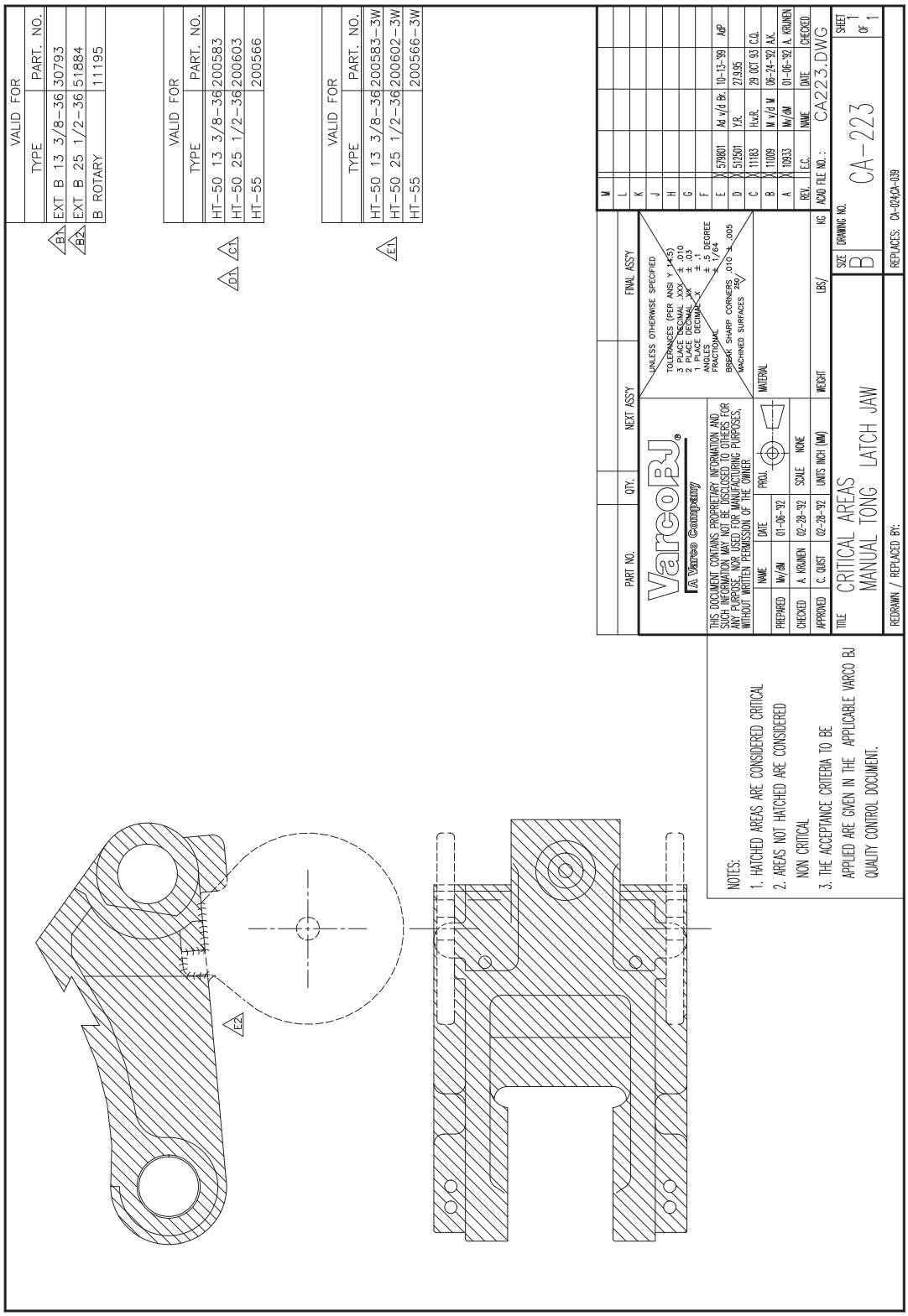
VALID FOR
TYPE
PART. NO.
EXT B 13 3/8-36 30793
EXT B 25 1/2-36 51884
B ROTARY 11195
VALID FOR
TYPE
PART. NO.
HT-50 13 3/8-36 200583
HT-50 25 1/2-36 200603
HT-55 200566
VALID FOR
TYPE
PART. NO.
HT-50 13 3/8-36 200583-3W
HT-50 25 1/2-36 200602-3W
HT-55 200566-3W
PART NO.
QTY.
NEXT ASSY
FINAL ASSY
UNLESS OTHERWISE SPECIFIED
TOLERANCES (PER ANSI Y 14.5)
3 PLACE DECIMAL .XXX ± .010
2 PLACE DECIMAL .XX ± .03
1 PLACE DECIMAL .X ± .1
ANGLES ± .5 DEGREE
FRACTIONAL ± 1/64
BREAK SHARP CORNERS .010 ± .005
MACHINED SURFACES 250
VarcoBJ
A Varco Company
THIS DOCUMENT CONTAINS PROPRIETARY INFORMATION AND CONFIDENTIAL MATERIAL. NOT TO BE COPIED OR USED FOR ANY PURPOSE, NOR MADE AVAILABLE TO OTHERS FOR MANUFACTURING PURPOSES, WITHOUT WRITTEN PERMISSION OF THE OWNER.
PREPARED Mr/dM 01-06-'92
CHECKED A. KRUNEN 02-28-'92
APPROVED C. QUIST 02-28-'92
PROJ.
SCALE NONE
UNITS INCH (MM)
MATERIAL
WEIGHT
LBS/
KG
REV. E.C. NAME DATE CHECKED
E X 579801 Ad v/d Br. 10-13-'99 AdP
D X 512501 Y.R. 27.9.95
C X 11163 H.v.R. 29 OCT 93 C.Q.
B X 11009 M v/d W 06-24-'92 A.K.
A X 11933 Mr/dM 01-06-'92 A. KRUNEN
ADD FILE NO.: CA223.DWG
TITLE CRITICAL AREAS
MANUAL TONG LATCH JAW
SIZE B
DRAWING NO. CA-223
SHEET 1 OF 1
REPLACES: CA-024,CA-039
REDRAWN / REPLACED BY:
NOTES:
1. HATCHED AREAS ARE CONSIDERED CRITICAL
2. AREAS NOT HATCHED ARE CONSIDERED NON CRITICAL
3. THE ACCEPTANCE CRITERIA TO BE APPLIED ARE GIVEN IN THE APPLICABLE VARCO BJ QUALITY CONTROL DOCUMENT.

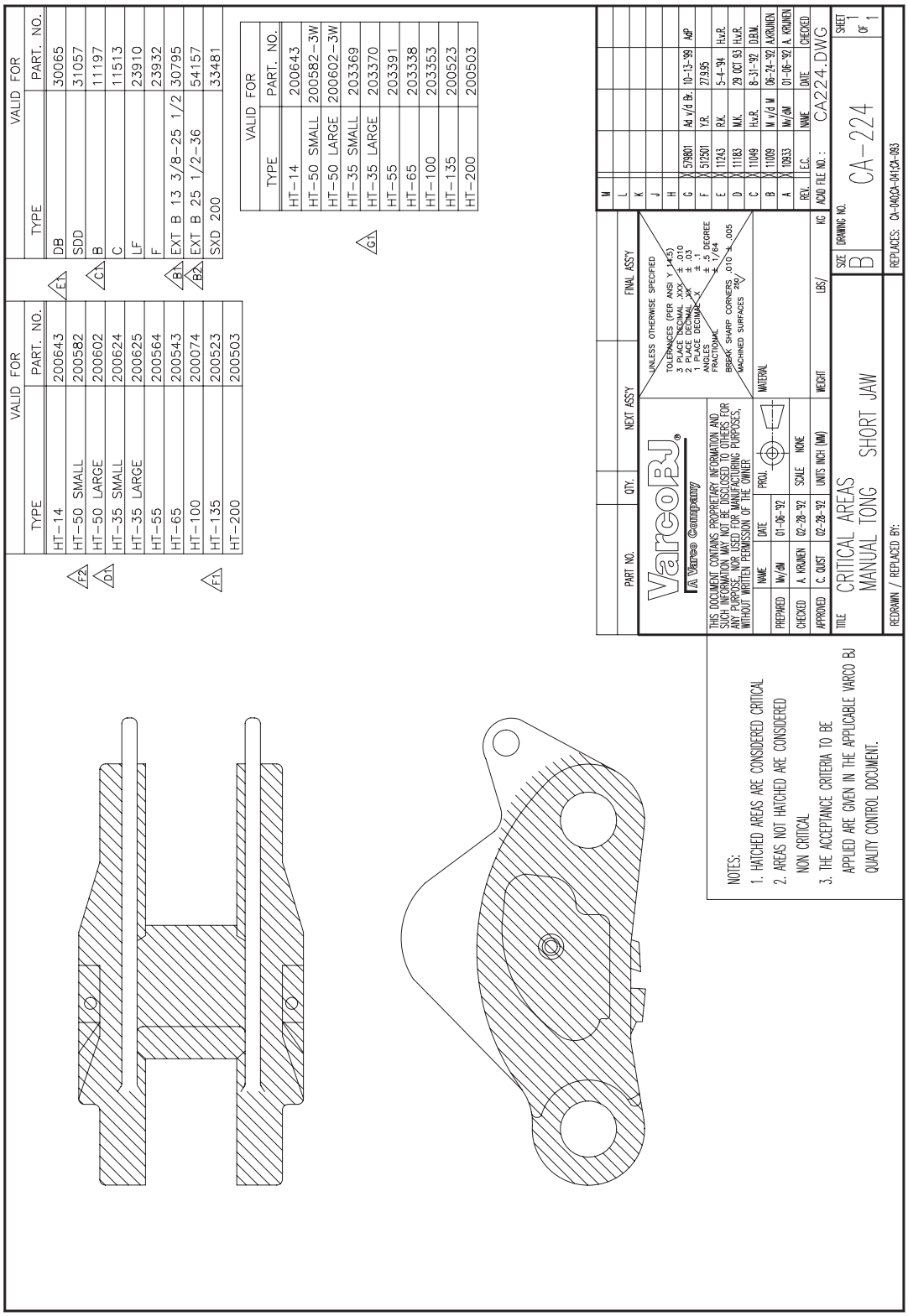
VALID FOR
TYPE
PART. NO.
HT-14 200643
HT-50 SMALL 200582
HT-50 LARGE 200602
HT-35 SMALL 200624
HT-35 LARGE 200625
HT-55 200564
HT-65 200543
HT-100 200074
HT-135 200523
HT-200 200503
F2
D1
F1
VALID FOR
TYPE
PART. NO.
DB 30065
SDD 31057
B 11197
C 11513
LF 23910
F 23932
EXT B 13 3/8-25 1/2 30795
EXT B 25 1/2-36 54157
SXD 200 33481
E1
C1
B1
B2
VALID FOR
TYPE
PART. NO.
HT-14 200643
HT-50 SMALL 200582-3W
HT-50 LARGE 200602-3W
HT-35 SMALL 203369
HT-35 LARGE 203370
HT-55 203391
HT-65 203338
HT-100 203353
HT-135 200523
HT-200 200503
G1
PART NO.
QTY.
NEXT ASSY
FINAL ASSY
VarcoBJ
A Varco Company
UNLESS OTHERWISE SPECIFIED
TOLERANCES (PER ANSI Y 14.5)
3 PLACE DECIMAL .XXX ± .010
2 PLACE DECIMAL .XX ± .03
1 PLACE DECIMAL .X ± .1
ANGLES ± 5 DEGREE
FRACTIONAL ± 1/64
BREAK SHARP CORNERS .010 ± .005
MACHINED SURFACES 250
THIS DOCUMENT CONTAINS PROPRIETARY INFORMATION AND SUCH INFORMATION MAY NOT BE DISCLOSED TO OTHERS FOR ANY PURPOSE, NOR USED FOR MANUFACTURING PURPOSES, WITHOUT WRITTEN PERMISSION OF THE OWNER
PROJ.
MATERIAL
NAME
DATE
PREPARED Mv/dM 01-06-'92
CHECKED A. KRUNEN 02-28-'92
APPROVED C. QUIST 02-28-'92
SCALE NONE
UNITS INCH (MM)
WEIGHT
LBS/
KG
M
L
K
J
H
G X 579801 Ad v/d Bx. 10-13-'99 AdP
F X 512501 Y.R. 27.9.95
E X 11243 R.K. 5-4-94 H.v.R.
D X 11163 M.K. 29 OCT 93 H.v.R.
C X 11049 H.v.R. 8-31-'92 D.B.W.
B X 11009 M v/d M 06-24-'92 AJKRUNEN
A X 10933 Mv/dM 01-06-'92 A. KRUNEN
REV. E.C. NAME DATE CHECKED
ACAD FILE NO.: CA224.DWG
TITLE CRITICAL AREAS
MANUAL TONG SHORT JAW
SIZE B
DRAWING NO. CA-224
SHEET 1 OF 1
REDRAWN / REPLACED BY:
REPLACES: CA-040;CA-041;CA-093
NOTES:
1. HATCHED AREAS ARE CONSIDERED CRITICAL
2. AREAS NOT HATCHED ARE CONSIDERED NON CRITICAL
3. THE ACCEPTANCE CRITERIA TO BE APPLIED ARE GIVEN IN THE APPLICABLE VARCO BJ QUALITY CONTROL DOCUMENT.

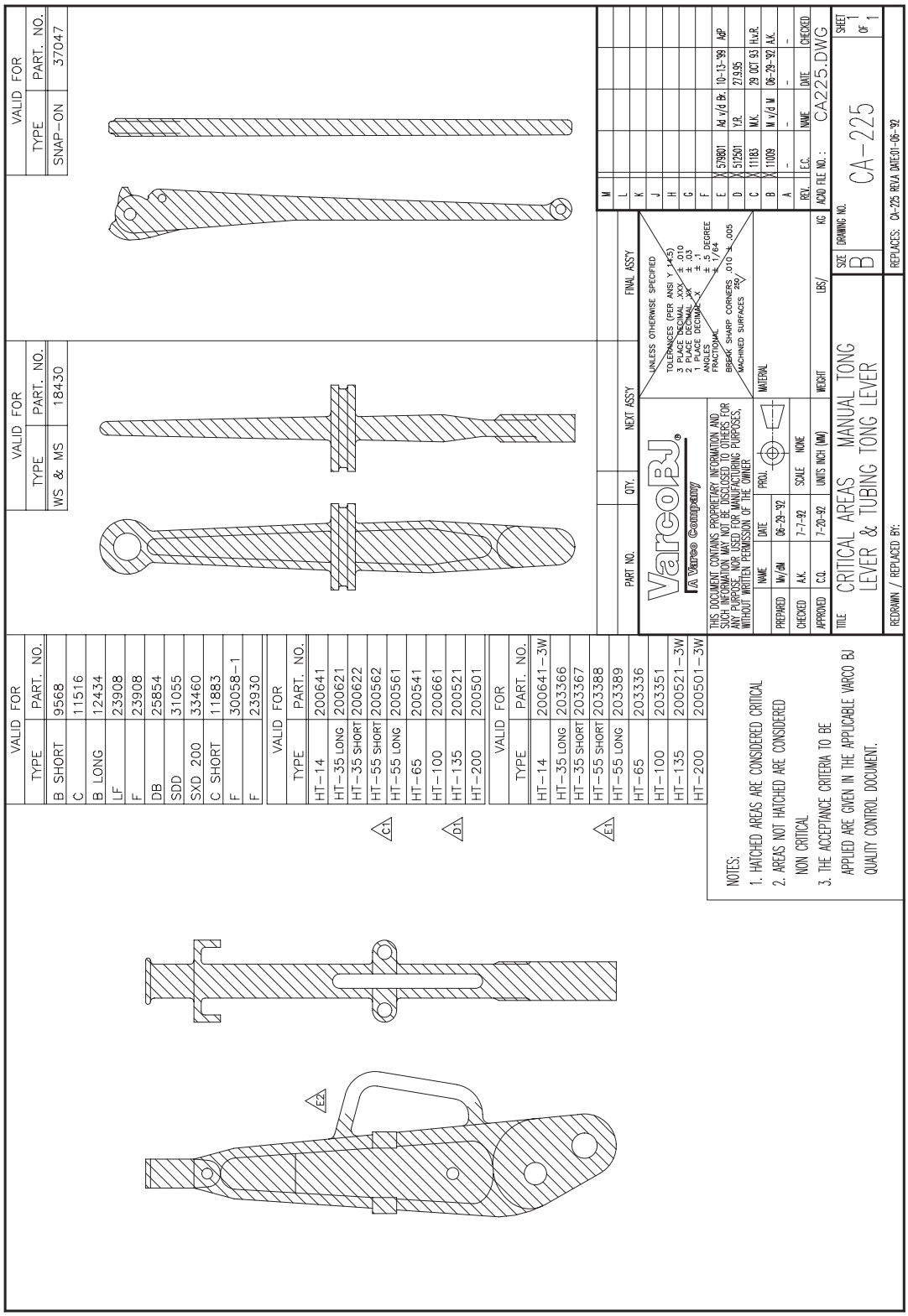
VALID FOR
TYPE PART. NO.
SNAP-ON 37047
VALID FOR
TYPE PART. NO.
WS & MS 18430
VALID FOR
TYPE PART. NO.
B SHORT 9568
C 11516
B LONG 12434
LF 23908
F 23908
DB 25854
SDD 31055
SXD 200 33460
C SHORT 11883
F 30058-1
F 23930
VALID FOR
TYPE PART. NO.
HT-14 200641
HT-35 LONG 200621
HT-35 SHORT 200622
HT-55 SHORT 200562
HT-55 LONG 200561
HT-65 200541
HT-100 200661
HT-135 200521
HT-200 200501
VALID FOR
TYPE PART. NO.
HT-14 200641-3W
HT-35 LONG 203366
HT-35 SHORT 203367
HT-55 SHORT 203388
HT-55 LONG 203389
HT-65 203336
HT-100 203351
HT-135 200521-3W
HT-200 200501-3W
C1
D1
E1
E2
NOTES:
1. HATCHED AREAS ARE CONSIDERED CRITICAL
2. AREAS NOT HATCHED ARE CONSIDERED NON CRITICAL
3. THE ACCEPTANCE CRITERIA TO BE APPLIED ARE GIVEN IN THE APPLICABLE VARCO BJ QUALITY CONTROL DOCUMENT.
PART NO. QTY. NEXT ASS'Y FINAL ASS'Y
UNLESS OTHERWISE SPECIFIED
TOLERANCES (PER ANSI Y 14.5)
3 PLACE DECIMAL .XXX ± .010
2 PLACE DECIMAL .XX ± .03
1 PLACE DECIMAL .X ± .1
ANGLES ± .5 DEGREE
FRACTIONAL ± 1/64
BREAK SHARP CORNERS .010 ± .005
MACHINED SURFACES 250
VarcoBJ
A Varco Company
THIS DOCUMENT CONTAINS PROPRIETARY INFORMATION AND SHALL NOT BE REPRODUCED OR DISTRIBUTED FOR ANY PURPOSE, NOR USED FOR MANUFACTURING PURPOSES, WITHOUT WRITTEN PERMISSION OF THE OWNER.
MATERIAL
PROJ.
WEIGHT LBS/ KG
UNITS INCH (MM)
SCALE NONE
PREPARED Wy/dM 06-29-92
CHECKED A.K. 7-7-92
APPROVED C.Q. 7-20-92
NAME DATE
TITLE CRITICAL AREAS MANUAL TONG LEVER & TUBING TONG LEVER
SIZE B
DRAWING NO. CA-225
SHEET 1 OF 1
REVISIONS
REV. E.C. NAME DATE CHECKED
E 579801 Ad v/d Br. 10-13-99 AdP
D 512501 Y.R. 27.9.95
C 11183 M.K. 29 OCT 93 H.v.R.
B 11009 M v/d W 06-29-92 A.K.
A - - - -
ACAD FILE NO.: CA225.DWG
REDRAWN / REPLACED BY:
REPLACES: CA-225 REV.A DATE01-06-92

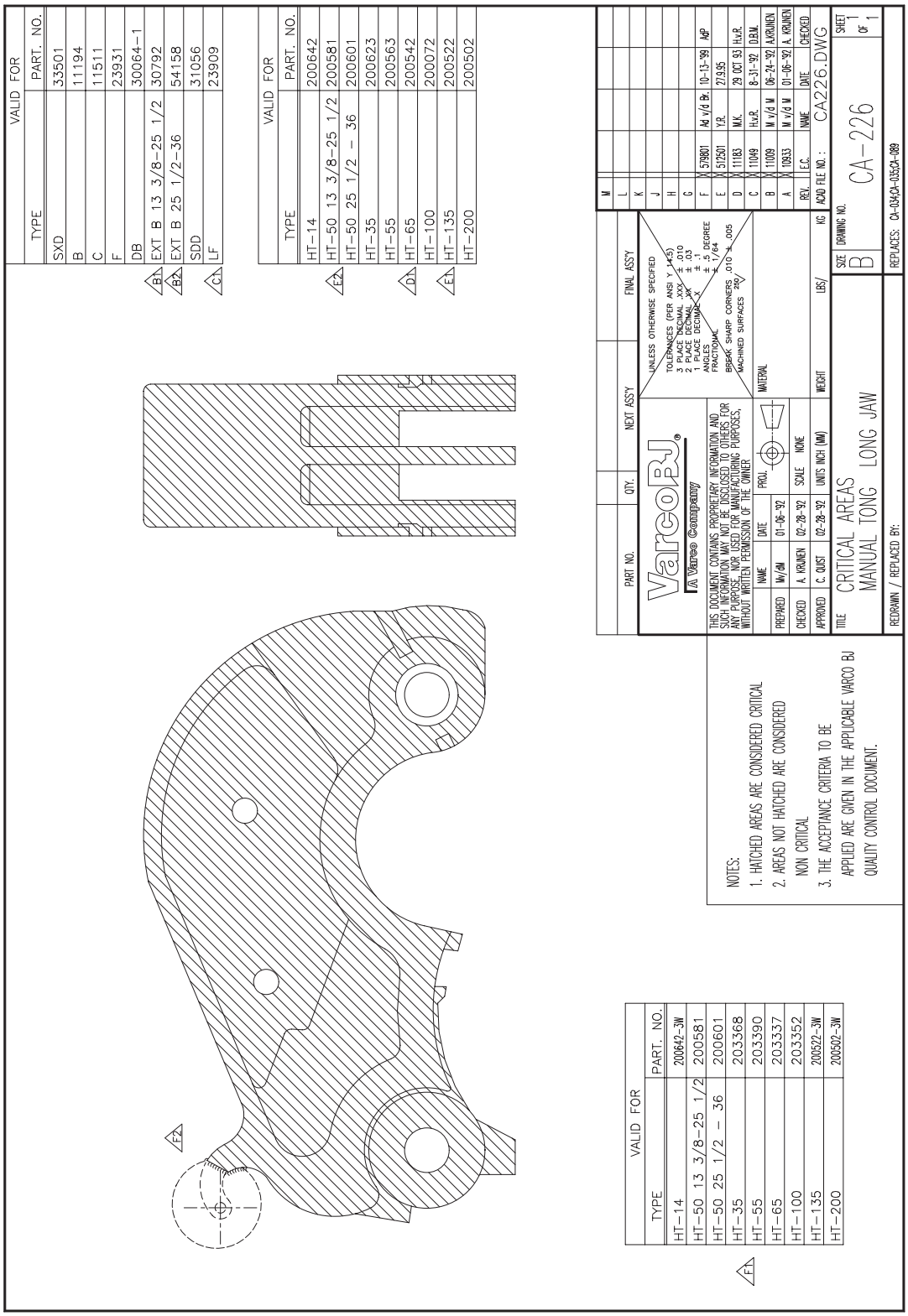
VALID FOR
TYPE
PART. NO.
SXD 33501
B 11194
C 11511
F 23931
DB 30064-1
B1 EXT B 13 3/8-25 1/2 30792
B2 EXT B 25 1/2-36 54158
SDD 31056
C1 LF 23909
VALID FOR
TYPE
PART. NO.
HT-14 200642
HT-50 13 3/8-25 1/2 200581
E2 HT-50 25 1/2 - 36 200601
HT-35 200623
HT-55 200563
D1 HT-65 200542
HT-100 200072
E1 HT-135 200522
HT-200 200502
F2
VALID FOR
TYPE
PART. NO.
HT-14 200642-3W
HT-50 13 3/8-25 1/2 200581
HT-50 25 1/2 - 36 200601
HT-35 203368
HT-55 203390
HT-65 203337
HT-100 203352
HT-135 200522-3W
HT-200 200502-3W
F1
NOTES:
1. HATCHED AREAS ARE CONSIDERED CRITICAL
2. AREAS NOT HATCHED ARE CONSIDERED NON CRITICAL
3. THE ACCEPTANCE CRITERIA TO BE APPLIED ARE GIVEN IN THE APPLICABLE VARCO BJ QUALITY CONTROL DOCUMENT.
PART NO.
QTY.
NEXT ASSY
FINAL ASSY
VarcoBJ
A Varco Company
THIS DOCUMENT CONTAINS PROPRIETARY INFORMATION AND SUCH INFORMATION MAY NOT BE DISCLOSED TO OTHERS FOR ANY PURPOSE, NOR USED FOR MANUFACTURING PURPOSES, WITHOUT WRITTEN PERMISSION OF THE OWNER
UNLESS OTHERWISE SPECIFIED
TOLERANCES (PER ANSI Y 14.5)
3 PLACE DECIMAL .XXX ± .010
2 PLACE DECIMAL .XX ± .03
1 PLACE DECIMAL .X ± .1
ANGLES ± 5 DEGREE
FRACTIONAL ± 1/64
BREAK SHARP CORNERS .010 ± .005
MACHINED SURFACES 250
MATERIAL
NAME
DATE
PREPARED Wy/dM 01-06-'92
CHECKED A. KRUNEN 02-28-'92
APPROVED C. QUIST 02-28-'92
PROJ.
SCALE NONE
UNITS INCH (MM)
WEIGHT
LBS/ KG
TITLE CRITICAL AREAS MANUAL TONG LONG JAW
SIZE B
DRAWING NO. CA-226
SHEET 1 OF 1
REDRAWN / REPLACED BY:
REPLACES: CA-034;CA-035;CA-089
REV. NAME DATE CHECKED
F 579801 Ad v/d Br. 10-13-'89 AdP
E 512501 Y.R. 27.9.95
D 11163 M.K. 29 OCT 93 H.v.R.
C 11049 H.v.R. 8-31-'92 D.B.W.
B 11009 M v/d W 06-24-'92 A.v.Krunen
A 10933 M v/d W 01-06-'92 A. KRUNEN
ACAD FILE NO.: CA226.DWG

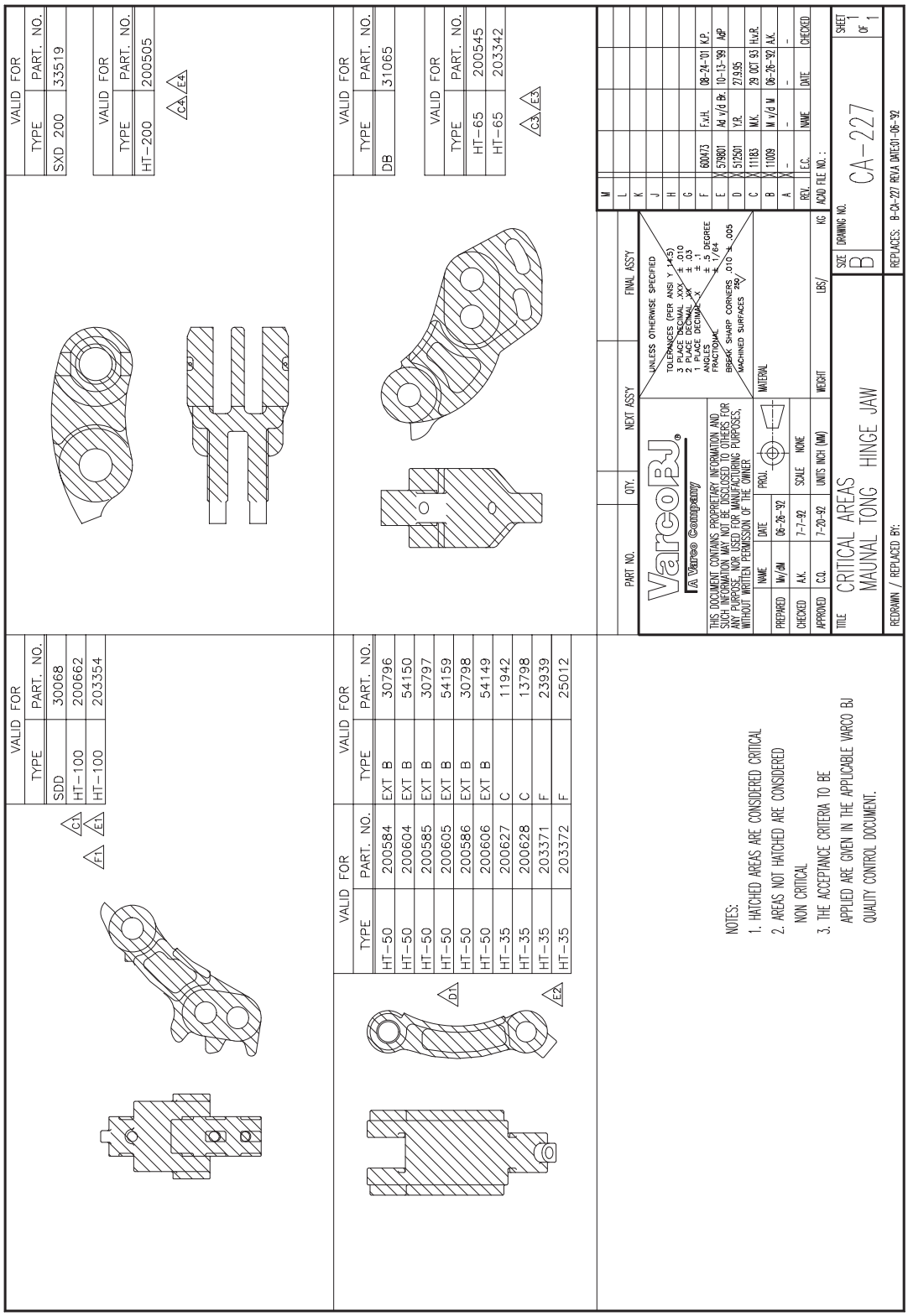
VALID FOR
TYPE PART. NO.
SXD 200 33519
VALID FOR
TYPE PART. NO.
HT-200 200505
C4 E4
VALID FOR
TYPE PART. NO.
DB 31065
VALID FOR
TYPE PART. NO.
HT-65 200545
HT-65 203342
C3 E3
VALID FOR
TYPE PART. NO.
SDD 30068
HT-100 200662
HT-100 203354
C1 E1
F1
VALID FOR
TYPE PART. NO.
HT-50 200584
HT-50 200604
HT-50 200585
HT-50 200605
HT-50 200586
HT-50 200606
HT-35 200627
HT-35 200628
HT-35 203371
HT-35 203372
VALID FOR
TYPE PART. NO.
EXT B 30796
EXT B 54150
EXT B 30797
EXT B 54159
EXT B 30798
EXT B 54149
C 11942
C 13798
F 23939
F 25012
D1
E2
NOTES:
1. HATCHED AREAS ARE CONSIDERED CRITICAL
2. AREAS NOT HATCHED ARE CONSIDERED NON CRITICAL
3. THE ACCEPTANCE CRITERIA TO BE APPLIED ARE GIVEN IN THE APPLICABLE VARCO BJ QUALITY CONTROL DOCUMENT.
PART NO.
QTY.
NEXT ASSY
FINAL ASSY
VarcoBJ
A Varco Company
THIS DOCUMENT CONTAINS PROPRIETARY INFORMATION AND SUCH MATERIAL MAY NOT BE REPRODUCED OR USED FOR ANY PURPOSE NOR USED FOR MANUFACTURING PURPOSES, WITHOUT WRITTEN PERMISSION OF THE OWNER.
UNLESS OTHERWISE SPECIFIED
TOLERANCES (PER ANSI Y 14.5)
3 PLACE DECIMAL .XXX ± .010
2 PLACE DECIMAL .XX ± .03
1 PLACE DECIMAL .X ± .1
ANGLES ± .5 DEGREE
FRACTIONAL ± 1/64
BREAK SHARP CORNERS .010 ± .005
MACHINED SURFACES 250
MATERIAL
WEIGHT
LBS/
KG
PREPARED Wy/dM 06-26-92
CHECKED A.K. 7-7-92
APPROVED C.Q. 7-20-92
NAME DATE
PROJ.
SCALE NONE
UNITS INCH (MM)
REV. E.C. NAME DATE CHECKED
ADD FILE NO. :
TITLE CRITICAL AREAS
MAUNAL TONG HINGE JAW
SIZE B
DRAWING NO. CA-227
SHEET 1 OF 1
REDRAWN / REPLACED BY:
REPLACES: B-CA-227 REVA DATE01-06-92

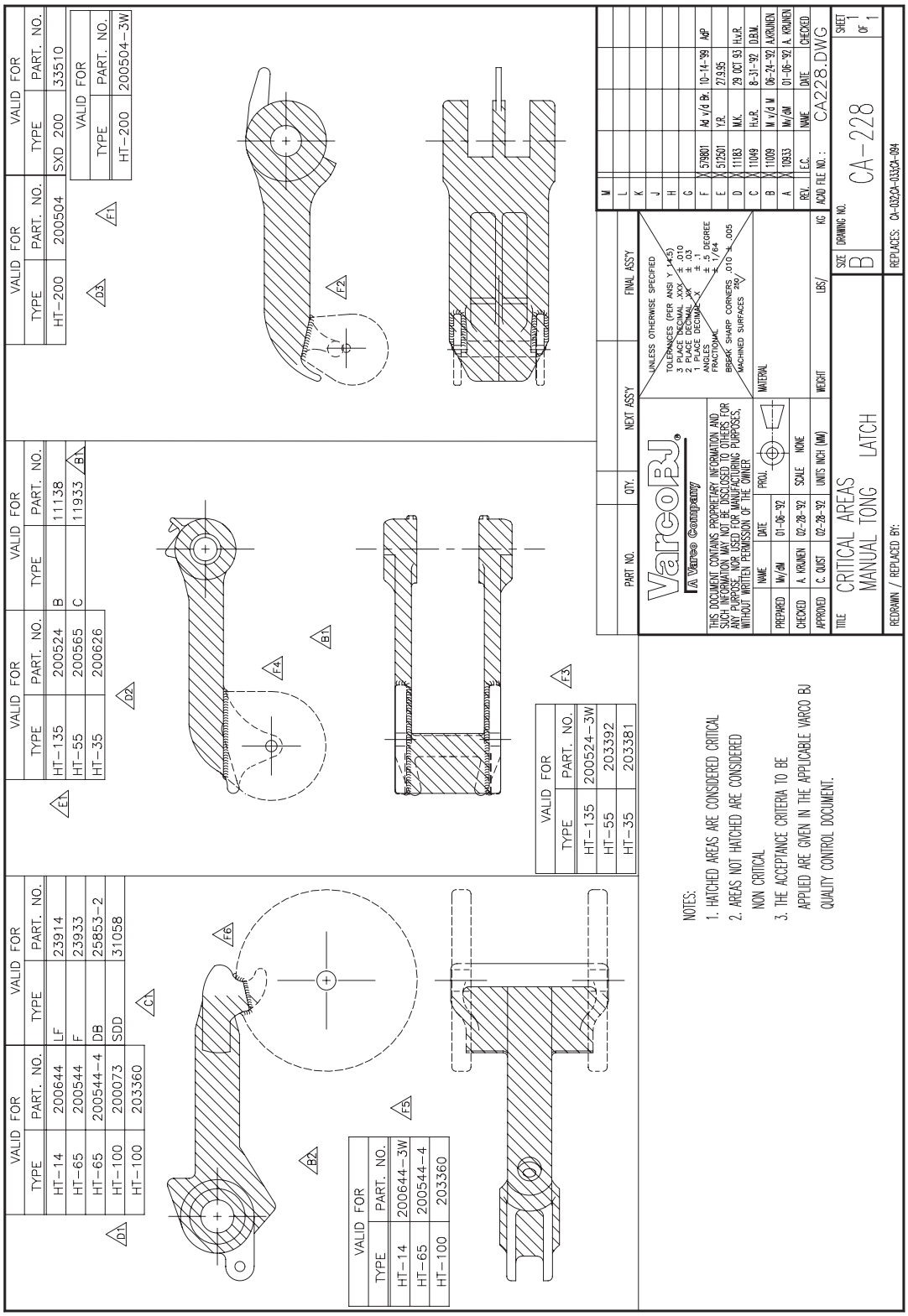
VALID FOR
TYPE PART. NO.
HT-14 200644
HT-65 200544
HT-65 200544-4
HT-100 200073
HT-100 203360
VALID FOR
TYPE PART. NO.
LF 23914
F 23933
DB 25853-2
SDD 31058
VALID FOR
TYPE PART. NO.
HT-14 200644-3W
HT-65 200544-4
HT-100 203360
VALID FOR
TYPE PART. NO.
HT-135 200524
HT-55 200565
HT-35 200626
VALID FOR
TYPE PART. NO.
B 11138
C 11933
VALID FOR
TYPE PART. NO.
HT-135 200524-3W
HT-55 203392
HT-35 203381
VALID FOR
TYPE PART. NO.
HT-200 200504
VALID FOR
TYPE PART. NO.
SXD 200 33510
VALID FOR
TYPE PART. NO.
HT-200 200504-3W
NOTES:
1. HATCHED AREAS ARE CONSIDERED CRITICAL
2. AREAS NOT HATCHED ARE CONSIDERED NON CRITICAL
3. THE ACCEPTANCE CRITERIA TO BE APPLIED ARE GIVEN IN THE APPLICABLE VARCO BJ QUALITY CONTROL DOCUMENT.
PART NO. QTY. NEXT ASSY FINAL ASSY
UNLESS OTHERWISE SPECIFIED
TOLERANCES (PER ANSI Y 14.5)
3 PLACE DECIMAL .XXX ± .010
2 PLACE DECIMAL .XX ± .03
1 PLACE DECIMAL .X ± .1
ANGLES ± 5 DEGREE
FRACTIONAL ± 1/64
BREAK SHARP CORNERS .010 ± .005
MACHINED SURFACES 250
MATERIAL
WEIGHT LBS/ KG
A Varco Company
THIS DOCUMENT CONTAINS PROPRIETARY INFORMATION AND SUCH INFORMATION MAY NOT BE DISCLOSED TO OTHERS FOR ANY PURPOSE, NOR USED FOR MANUFACTURING PURPOSES, WITHOUT WRITTEN PERMISSION OF THE OWNER
PROJ.
SCALE NONE
UNITS INCH (MM)
NAME DATE
PREPARED Mr/dM 01-06-'92
CHECKED A. KRUNEN 02-28-'92
APPROVED C. QUIST 02-28-'92
REV. ECO. NAME DATE CHECKED
F 579801 Ad v/d Br. 10-14-'99 AdP
E 572501 Y.R. 27.9.95
D 11163 M.K. 29 OCT 93 H.v.R.
C 11049 H.v.R. 8-31-'92 D.B.W.
B 11009 M v/d M 06-24-'92 AJKRUNEN
A 10933 Mr/dM 01-06-'92 A. KRUNEN
ACAD FILE NO.: CA228.DWG
TITLE CRITICAL AREAS MANUAL TONG LATCH
SIZE B
DRAWING NO. CA-228
SHEET 1 OF 1
REDRAWN / REPLACED BY:
REPLACES: CA-023,CA-033,CA-094

SAFETY DATA SHEET
AUTOL TOP 2000

1. Identification of the substance/preparation and of the company/undertaking

Date issued	21.07.2010
Product name	AUTOL TOP 2000
Use of the substance/preparation	Lubricating grease

Importer

Company name	Vedlikehold Industri Produkt AS
Postal address	Postboks 2003
Postcode	N-4392
Place name	SANDNES
Country	Norway
Tel	+47 51686030
Fax	+47 51686031
E-mail	mail@v-i-p.no
Website	www.autol.no
Prepared by	Developed/ revised by ApplySørco AS, Koppholen 6, Postbox 8040, N-4068 Stavanger, Norway.
Emergency telephone	Poisen informationcentral:+47 22 59 13 00

2. Hazards identification

Classification CLP	EUH 210
Description of hazard	The product has not been classified according to the legislation in force. msds for available for professionel users.

3. Composition/information on ingredients

Component name	Identification	Classification	Contents
Zincdialkyldithiophosfate	CAS no.: 68649-42-3	Xi, N; R38, R41, R51/53	< 2,5 %
Mineral oil			10 - 30 %

Column headings	CAS no. = Chemical Abstracts Service; EU (Einecs or Elincs number) = European inventory of Existing Commercial Chemical Substances; Ingredient name = Name as specified in the substance list (substances that are not included in the substance list must be translated, if possible). Contents given in; %, %wt/wt, %vol/wt, %vol/vol, mg/m3, ppb, ppm, weight%, vol%
HH/HF/HE	T+ = Very toxic, T = Toxic, C = Corrosive, Xn = Harmful, Xi = Irritating, E = Explosive, O = Oxidizing, F+ = Extremly flammable, F = Very flammable, N = Environmental hazard
Component comments	Contains in addition component which are not classified. Mineral oil contains DMSO<3% and therefor not classified as cancer.

4. First-aid measures

General	Remove affected person from source of contamination. Provide rest, warmth and fresh air.
Inhalation	Fresh air and rest. Get medical attention if any discomfort continues.
Skin contact	Wash skin with soap and water. Remove contaminated clothes and rinse skin thoroughly with water. Get medical attention if any discomfort continues. Clothes must be washed before re-use.
Eye contact	Immediately flush with plenty of water for up to 15 minutes. Remove any

	contact lenses and open eyes wide apart. Contact physician if irritation persists.
Ingestion	Immediately give a couple of glasses of water or milk, provided the victim is fully conscious. DO NOT INDUCE VOMITING! Get medical attention.

5. Fire-fighting measures

Suitable extinguishing media	Water spray, carbon dioxide, dry powder or polar resistant foam. If possible, remove containers exposed to heat or cool with water.
Improper extinguishing media	Water-jet.
Fire and explosion hazards	Not flammable Fire causes formation of toxic gases. Irritating gases/vapours/fumes of: Carbon dioxide (CO2). Carbon monoxide (CO).
Personal protective equipment	Fire brigade must use fresh-air helmet.

6. Accidental release measures

Personal precautions	Wear protective clothing as described in Section 8 of this safety data sheet. Avoid contact with skin and eyes. In case of spills, beware of slippery floors and surfaces.
Environmental precautions	Do not allow to enter drains, sewers or watercourses.
Methods for cleaning	Absorb with inert, damp, non-combustible material, then flush area with water. Dangerous waste. Collect spillage in containers, seal securely and deliver for disposal according to local regulations.

7. Handling and storage

Handling	Wear protective clothing as described in Section 8. Avoid contact with skin and eyes. Be aware of slippy floors. Contaminated rags and cloths must be put in fireproof containers for disposal.
Storage	Closed container. Original container. Avoid sunlight. Keep out of reach of children.

8. Exposure controls/personal protection

Exposure limit values

Component name	Identification	Value	Year
Zincdialkyldithiophosfate	CAS no.: 68649-42-3		
Mineral oil			

Exposure controls

Threshold limit values	adm.norm.=TLV
Other Information about threshold limit values	Adm. norm: Oil mist: 1 mg/m3, Oil vapour: 50mg/m3
Occupational exposure controls	An eye wash bottle must be available at the work site.
Respiratory protection	Respiratory protection not required.
Hand protection	For prolonged or repeated skin contact use suitable protective gloves. Nitril. Break-throughtime> 8 hours.
Eye protection	Wear approved chemical safety goggles where eye exposure is reasonably probable.
Skin protection (other than of the hands)	Wear appropriate clothing to prevent repeated or prolonged skin contact.
Other Information	When using do not eat, drink or smoke. Promptly remove any clothing that becomes wet or contaminated. Wash hands after handling. Wash contaminated clothing before reuse.

9. Physical and chemical properties

Physical state	Paste
Odour	Characteristic

Colour	Misc. colours
Solubility in water	Not soluble.
Specific gravity	**Value:** 0,91-0,95 g/cm3 **Comments:** 20 C
Melting point/melting range	**Value:** > 145 °C
Flash point	**Value:** > 200 °C

10. Stability and reactivity

Conditions to avoid	Avoid heat.
Materials to avoid	Strong oxidising substances.
Hazardous decomposition products	Fire creates: Carbon monoxide (CO). Carbon dioxide (CO2). Sulphurous gases (SOx).
Stability	Stable under the prescribed storage conditions.

11. Toxicological information

Components' toxicological data

Other information regarding health hazards

Inhalation	Vapours irritate the respiratory system, and may cause coughing and difficulties in breathing.
Skin contact	Prolonged contact may cause dryness of the skin.
Eye contact	May cause temporary eye irritation.
Ingestion	May irritate and cause stomach pain, vomiting and diarrhoea.

12. Ecological information

Components' toxicological data

Other ecological information

Ecotoxicity	,may give unwanted long-time effects i water
Mobility	The product has poor water-solubility.
Persistence and degradability	The product is not readily biodegradable.
Bioaccumulative potential	Will not bio-accumulate.

13. Disposal considerations

EWC waste code	EWC: 130205 mineral-based non-chlorinated engine, gear and lubricating oils
Product classified as hazardous waste	Yes
Packaging classified as hazardous waste	No
Specify the appropriate methods of disposal	Absorb in vermiculite or dry sand, dispose in licensed special waste.

14. Transport information

Dangerous goods ADR	**Status:** No
Dangerous goods RID	**Status:** No
Dangerous goods IMDG	**Status:** No
Dangerous goods ICAO/IATA	**Status:** No

15. Regulatory information

Composition on the label	Zincdialkyldithiophosfate: < 2,5 %, Mineral oil: 10 - 30 %
EC lable	No
R phrases	None
S phrases	S2 Keep out of the reach of children. S24 Avoid contact with skin. Safety

	data sheet available for professional user on request.
Hazard statements	EUH 210 Safety data sheet available on request.
Precautionary statements	P102 Keep out of reach of children. P262 Do not get in eyes, on skin, or on clothing.
References (laws/regulations)	MSDS is developed/ revised after 1 ATP to CLP. Chemicals (Hazard Information & Packaging) Regulations. Commission Decision 2000/532/EC as amended by Decision 2001/118/EC establishing a list of wastes and hazardous waste pursuant to Council Directive 75/442/EEC on waste and Directive 91/689/EEC on hazardous waste with amendments. Control of Pollution (Special Waste Regulations) Act 1980.

16. Other information

List of relevant R phrases (under headings 2 and 3).	R38 Irritating to skin. R41 Risk of serious damage to eyes. R51/53 Toxic to aquatic organisms, may cause long-term adverseeffects in the aquatic environment.
Supplier's notes	Developed/ revised by ApplySørco AS. Koppholen 6. Postboks 8040, 4068 Stavanger. tlf. +47 51639000 webside: www.ApplySorco.no Quality assured by SØRCO AS etter 1 ATP til CLP.
Responsible for safety data sheet	Sørco AS